FILENAME: Coversheet Drawings White Sox 106792.dwg PLOT: Oct. 25, 2012 1:12 pm

As-Built
Project #: 106792
October 25th, 2012

DIVERSIFIED
S Y S T E M S
363 Market Street
Kenilworth, NJ 07033
Phone (908) 245-4833
Fax (908) 245-0011
3275 Edward Avenue
Santa Clara, CA 95054
Phone (408) 969-1972
Fax (408) 969-1985
www.divsystems.com

Copyright © 2012 Diversified Systems

DWG#	REV	TITLE
0001	09	DIVERSIFIED SYSTEMS FLAG STYLE DRAWING CONVENTIONS
0005	07	ABBREVIATION BY FUNCTION
0006	00	ABBREVIATIONS IN ALPHABETICAL ORDER
0101	00	SCOREBOARD CONTROL ROOM FLOOR PLAN
0103	00	SCOREBOARD EDIT ROOM FLOOR PLAN
0111	00	CONTROL ROOM RACKS 10-17 RACK ELEVATION - FRONT
0112	00	EQUIPMENT ROOM RACKS 10-17 RACK ELEVATION - REAR
0113	00	CONTROL ROOM RACKS 20-27 RACK ELEVATION - FRONT
0114	00	EQUIPMENT ROOM RACKS 20-27 RACK ELEVATION - REAR
0115	00	CONTROL ROOM CONSOLE 30-36 ELEVATION
0117	00	CONTROL ROOM CONSOLE 40-52 ELEVATION
0119	00	CONTROL ROOM CONSOLE 60-71 ELEVATION
0121	00	CONTROL ROOM CONSOLE 80-87 ELEVATION
1001	00	VIDEO ROUTER VIDEO WIRING DIAGRAM
1101	00	CAMERA SYSTEM - INPUTS VIDEO WIRING DIAGRAM
1103	00	CAMERA SYSTEM - OUTPUTS VIDEO WIRING DIAGRAM
1111	00	RF CAMERA SYSTEM VIDEO WIRING DIAGRAM
1201	00	GRAPHICS SYSTEM 1 VIDEO WIRING DIAGRAM
1203	00	GRAPHICS SYSTEM 2 VIDEO WIRING DIAGRAM
1205	00	GRAPHICS SYSTEM 3 VIDEO WIRING DIAGRAM
1207	00	CLICK EFFECTS SERVERS VIDEO WIRING DIAGRAM
1209	00	CLIP SERVER VIDEO WIRING DIAGRAM
1301	00	TRUCK DOCK - COACHING FIBER VIDEO WIRING DIAGRAM
1303	01	FIBER INTERFACE SYSTEM VIDEO WIRING DIAGRAM
1311	00	FRAME SYNCS 1-4 VIDEO WIRING DIAGRAM
1313	00	FRAME SYNCS 5-8 VIDEO WIRING DIAGRAM
1315	00	FRAME SYNCS 9-12 VIDEO WIRING DIAGRAM
1351	00	CLOSED CAPTIONING SYSTEM VIDEO WIRING DIAGRAM
1361	00	UTILITY MUX - DA VIDEO WIRING DIAGRAM
1391	00	FACILITY TIELINES VIDEO WIRING DIAGRAM
1401	00	VIDEO SWITCHER VIDEO WIRING DIAGRAM
1411	00	STADIUM DISPLAY DISTRIBUTION VIDEO WIRING DIAGRAM
1421	00	MLB MEDIA SYSTEM INTERFACE VIDEO WIRING DIAGRAM
1501	00	VTR VIDEO WIRING DIAGRAM
1503	00	DVD RECORDING VIDEO WIRING DIAGRAM
1505	00	BLURAY RECORDING VIDEO WIRING DIAGRAM
1511	00	REPLAY SEVER SYSTEM A VIDEO WIRING DIAGRAM
1513	00	REPLAY SERVER SYSTEM B VIDEO WIRING DIAGRAM
1515	00	SLOMO - INGEST VIDEO WIRING DIAGRAM
1521	00	ARENA MEDIA NETWORKS SERVER VIDEO WIRING DIAGRAM
1531	00	SCAN CONVERTORS VIDEO WIRING DIAGRAM
1601	00	QC MONITORING VIDEO WIRING DIAGRAM
1701	00	VIP MONITORING VIDEO WIRING SYSTEM
1705	00	VIDEO MONITORING VIDEO WIRING DIAGRAM
1801	00	MATV CONTRIBUTION VIDEO WIRING DIAGRAM
1811	00	CABLE & SATELLITE DEMOD VIDEO WIRING DIAGRAM
1901	01	MASTER SYNC & REFERENCE VIDEO WIRING DIAGRAM

DWG#	REV	TITLE
2001	00	AUDIO ROUTER AUDIO WIRING DIAGRAM
2003	00	AUDIO ROUTER - MADI BREAKOUT AUDIO WIRING DIAGRAM
2101	00	AUDIO MIXER - MONITORING AUDIO WIRING DIAGRAM
2201	00	AUDIO MIXER - PA AUDIO WIRING DIAGRAM
2501	00	INTERCOM SYSTEM ANALOG AUDIO WIRING DIAGRAM
2503	00	INTERCOM SYSTEM MATRIX AUDIO WIRING DIAGRAM
3001	00	PORT ROUTER AUDIO WIRING DIAGRAM
4001	00	EDIT SYSTEMS VIDEO WIRING DIAGRAM
4003	00	DUB RACK VIDEO WIRING DIAGRAM
4011	00	EDIT NETWORK SYSTEM CONTROL WIRING DIAGRAM
5001	00	ROUTER CONTROL SYSTEM CONTROL WIRING DIAGRAM
5011	00	TALLY SYSTEM CONTROL WIRING DIAGRAM
5021	00	KVM MATRIX CONTROL WIRING DIAGRAM
5023	00	KVM USER WORKSTATIONS CONTROL WIRING DIAGRAM
5031	00	SYSTEM CONTROL NETWORKS CONTROL WIRING DIAGRAM
5033	00	NETWORK TIES CONTROL WIRING DIAGRAM
6001	00	PANEL ELEVATION STADIUM BOXES
7001	01	HD VIDEO RK 21 A-HH JACKFIELD ELEVATION
7011	02	AES RK 20 A-Z JACKFIELD ELEVATION
7021	0	VIDEO AND AUDIO TIE LINES JACKFILED ELEVATION
7031	0	TRIAX TXPP 11A-11E JACKFIELD ELEVATION

Copyright © 2012 Diversified Systems

DIVERSIFIED SYSTEMS

REV	DATE	DESCRIPTION	ENG
00	00/00/00	Initial Draft	F. LAST

ENG: M. MEGLATHERY
DRAFTER: J. YOO
SCALE: NTS
UPDATED: 10/24/12 09:42:50
STATUS: AS-BUILT

C Arch

SHEET TITLE: SYSTEM DRAWINGS

SHEET: 1 OF 1 | FILENAME: INDEX-03 Drawings White Sox 106792.dwg | REV LEVEL: 03

PROJECT NO. 106792

DRAWING NO. INDEX

PLOT: Oct. 25, 2012 1:12 pm

PATCH CIRCUITS

RK 401 — RACK LOCATION
DVJF — JACKFIELD TYPE AND SIGNAL (IN THIS CASE, DIGITAL VIDEO)

FULL-NORMAL OR HALF-NORMAL PATCH
VIDEO OR AUDIO

NON-NORMAL PATCH
VIDEO OR AUDIO
CABLE COMING FROM OUTPUT OF EQUIPMENT TO PATCH.

CABLE FROM PATCH TO INPUT OF EQUIPMENT.

FULL AND NON-NORMAL PATCH
CONTROL

DEMARC OR I/O PANEL

FRONT (F) AND REAR (R) OF PANEL INDICATED BY LETTERS ON SIDES OF BRACKET.

RK 5 — PANEL LOCATION
R / IDFNL 5A / F — PANEL MNEMONIC
EQ ROOM — ADDITIONAL USEFUL INFORMATION

I/O PANEL
10564 — CABLE IDENTIFICATION (WIRE) NUMBER.
BNC — VID IN — TEXT LABELS ON THE FRONT OF THE PANEL

CONNECTOR IDENTIFICATION MNEMONIC INDICATES THE CONNECTOR TYPE. MULTIPIN CONNECTOR MNEMONICS USUALLY INCLUDE QUANTITY OF PINS AND THE GENDER OF THE CONNECTOR IMMEDIATELY ADJACENT TO THE CONNECTOR MNEMONIC.

5968 — D9P-BH — J15
I/O PANEL-MOUNTED CONNECTOR EXAMPLE. CABLE NUMBER 5968 IS HARD-WIRED FROM THE REAR OF THE PANEL. NO CABLE IS CONNECTED TO THE FRONT OF THE PANEL-MOUNT 9-PIN D-SUB PLUG (D9P) LABELED J15 ON THE PANEL FRONT LEGEND. A PIN-OUT DETAIL FOR THE CONNECTOR IS PROVIDED IN CABLE FABRICATION DRAWING DETAIL 2D.
S = SOCKET; P = PLUG; BH = BULKHEAD CONNECTOR.

BPOST — +5V
BINDING POSTS AND QCP PUNCH-DOWNS THAT DIRECTLY CONTACT CABLE CONDUCTORS ARE SHOWN AND LABELED SIMILAR TO MULTIPIN CONNECTORS. QCP PUNCH DOWNS IN AUDIO PATCH BAYS ARE NOT INCLUDED ON WIRING DIAGRAMS AS THEY ARE CONSIDERED PART OF THE PATCH CIRCUIT ITSELF.

QCP — 2B
ON DEMARC OR I/O PANELS ONLY: BNC, TRIAX AND XLR TYPE CONNECTORS ARE ALSO DRAWN AND LABELED LIKE MULTIPIN CONNECTORS. THIS PROVIDES AESTHETIC CONSISTENCY FOR ALL PANEL CONNECTIONS, AND ALLOWS EASY TEXT EDITING IN AUTOCAD.

GROMMET
A CABLE PASSING THROUGH A GROMMETED HOLE IN A PANEL.

"FLY-OFF" AND "FLY-ON"

16101 — CCU1 RET1 [1501]
"FLY-OFF" OR "TO"
HERE, THE SIGNAL LEAVES THE DRAWING AND GOES TO CCU1 VIDEO RETURN ON DRAWING 1501 WITH CABLE NO. 16101.

DVDA 14 OUT 1 (VTR 1) VIA PP [1001] — 10112
"FLY-ON" OR "FROM"
"FLY-ON" OR "FROM" NOTE. (HERE, THE SIGNAL ENTERS THE DRAWING FROM DVDA 14 VIA A PATCH PANEL ON DRAWING 1001 WITH CABLE NO. 10112. THE SIGNAL IS FOR VTR1)

16101 — SWR1 REMOTE [THIS DWG]
PC1 COM1 [THIS DWG] — 10112
"TO" AND "FROM" WITHIN THE SAME DRAWING
ONLY USE WHERE THE ALTERNATIVE OF DRAWING IN THE COMPLETE SIGNAL PATH WOULD BE TOO COMPLICATED (MULTIPLE DOG-LEGS, CROSSING CABLES, ETC).

TYPES OF LOOP THROUGH AND TERMINATOR

SDI
SDI
75Ω BNC
VS
REM
VS

OR

SDI/ LOOP — VIDEO/AUDIO LOOP
SDI/ LOOP — 75Ω BNC — TERMINATOR
SDI/ LOOP VS — CONTROL LOOP

MISCELLANEOUS SYMBOLS

HD15P VS — DONGLE
EQUIPMENT WHICH INSTALLS DIRECTLY ONTO OTHER EQUIPMENT WITHOUT INTERCONNECTING WIRE; DESCRIPTION AND MAKE/MODEL ARE SPECIFIED BY A REFERENCE NOTE IN GENERAL NOTES TABLE.

DVI-D VS /HDMI — HDMI — ADAPTER
ADAPTER CONVERTS HDMI TO DVI-D

SBUS — BNC TEE
BNC TEE CONNECTED DIRECTLY ON EQUIPMENT. (ACTUALLY HAS 3 UNITS; 1 BNC CONNECTOR ON EACH CABLE END AND A TEE COUPLING IN BETWEEN.)

BNC BP CH1/2 — AES IN
BNC BP CH3/4
BALUN
EQUIPMENT-MOUNTED BALUN MATCHES UNBALANCED 75Ω AES TO BALANCED 110Ω AES.

AES OUT CH1/2 SB BNC
CH3/4 SB BNC
EQUIPMENT-MOUNTED BALUN MATCHES BALANCED 110Ω AES TO UNBALANCED 75Ω AES.

DADA 121B7 BLK REF [2051] — 11540 — DARS
SOURCE DA CHANGED, SEE DWG 2051
REVCLOUD
REVISION CLOUD USED TO NOTE A CHANGE DURING A BUILD.

INLINE
OUT D9P 3K VS
OUT ST
OUT BNC
IN-LINE CONNECTION
IN-LINE MUTIPIN CONNECTION, FIBER CONNECTOR AND BNC.

VTR 101
MAKE
MODEL
RK 000

FS 301
FRAME SYNC
IN A PERIPH FRAME
MAKE
MODEL
RK 000 FR A SL 2

EQUIPMENT

RACK MOUNTED EQUIPMENT & FRAME/CARD EQUIPMENT

MNEM
SUBTITLE 2
MAKE
MODEL
RK 000

BREAK

I/O CONNECTIONS OF THIS DEVICE OF THE SAME SIGNAL TYPE ARE SHOWN ACROSS MULTIPLE BLOCKS.

USUALLY USED WHEN THIS DEVICE IS ON MORE THAN ONE DRAWING, BUT CAN ALSO BE USED SPARINGLY ON THE SAME DRAWING TO KEEP CABLE PATHS SIMPLE.

MON/WFM
SUBTITLE
SUBTITLE 2
MAKE
MODEL
RK 000

MONITOR AND WAVEFORM

HAVE ROUNDED CORNERS FOR QUICK IDENTIFICATION

MNEM
SUBTITLE
SUBTITLE 2
MAKE
MODEL
RK 000 FR ❂ SL #

1- (VT 1 PGM) — SDI IN
2- (VT 1 MENU)
1- — VID IN
2-
D9P VS CTL
SDI
CTL 5B D9P
CAM TRIAX
MON RCA
D9S 4F GPI IN
GPI OUT 4J D9S

CARD MOUNTED IN A FRAME

RACK MOUNTED EQUIPMENT

ENGINEERING INFORMATION
TEXT IN PARENTHESIS IS ENGINEERING INFORMATION

VENDOR SUPPLIED
"VS" INDICATES PRE-FABRICATED VENDOR SUPPLIED CABLE.

MULTI-PIN CONNECTOR
"5B" INDICATES PINOUT DETAIL DRAWING.

MULTI-PIN CONNECTOR TYPE
"D9P" INDICATES THE CABLE'S CONNECTOR. NOT THE CONNECTOR MOUNTED ON THE EQUIPMENT CHASSIS.

SEE LEGEND NOTES NUMBER 2.

CONNECTORS WITH A BREAK
THIS SHOWS ONE CONNECTOR WHICH HAS BOTH INPUT AND OUTPUT SIGNALS

CABLE BUSING

TBD [_____] 31250 / 31251 / 31252 / 31253 — 4/ — 31250 / 31251 / 31252 / 31253 TBD [_____]

TBD [_____] 29814 IN — OUT 26587 — TBD [_____]

TBD [_____] 29814 IN — OUT 26587 — TBD [_____]

PC 1 VGA VS HD15P
KYBD VS PS2
MSE VS PS2
23356

MNEM
SUBTITLE
(FUTURE)
MAKE
MODEL
RK 000

CAM 10 [FUT] — TRIAX — FUTURE CABLE.

FUTURE EQUIPMENT & CABLES

BLOCK IS OUTLINED BY A BROKEN LINE TYPE
"(FUTURE)" OR "(FUT)" INDICATES FUTURE EQUIPMENT

SVR 201
MAKE
MODEL
RK 000

SLOT 1
CH 1
JBLOGG
ZX1234
IN

SLOT 2
CH 2
JBLOGG
ZX1234
IN

RJ45P VS ENET

OPTION SLOT

USED WHERE THE SLOT NUMBER IS THE ONLY THING DEFINING THE CORRECT I/O CONNECTION.
OFTEN REQUIRED FOR VIDEO EQUIPMENT THAT IS COMPUTER BASED.

MNEM
SUBTITLE
SUBTITLE 2
MAKE
MODEL
RK 000

01	aaa nnn	aaa nnn	01
02	aaa nnn	aaa nnn	02
03	aaa nnn	aaa nnn	03
04	aaa nnn	aaa nnn	04
05	aaa nnn	aaa nnn	05
06	aaa nnn	aaa nnn	06
07	aaa nnn	aaa nnn	07
08	aaa nnn	aaa nnn	08
09	aaa nnn	aaa nnn	09
10	aaa nnn	aaa nnn	10
11	aaa nnn	aaa nnn	11
12	aaa nnn	aaa nnn	12
13	aaa nnn	aaa nnn	13
14	aaa nnn	aaa nnn	14
15	aaa nnn	aaa nnn	15
16	aaa nnn	aaa nnn	16

SWITCHERS & ROUTERS & MIXERS

THESE DEVICES TYPICALLY HAVE THE SAME NUMBER OF INPUTS AND OUTPUTS SO A BLOCK WORKS BETTER THAN A FLAG.

BLOCK IS WIDER THAN NORMAL TO ACCOMODATE THE MNEMONICS, SHOWN HERE AS aaa nnn, (E.G. VTR 001, OR CAM 008, ETC)

VTR 101
BETACAM SP
SONY
MODEL
RK 000

SDI IN — SDI OUT
NTSC OUT — IN — NTSC IN
OUT

ANALOG I/F 101
VIDEO D>A & A>D
MAKE
MODEL
RK 000

"WRAP AROUND" INTERFACE EQUIPMENT

OPTIONAL REPRESENTATION FOR EQUIPMENT THAT "WRAPS-AROUND" OTHER EQUIPMENT. ANALOG-DIGITAL CONVERTERS, AUDIO BAL-UNBAL 1/F, ETC. COULD ALSO BE SHOWN AS STANDARD FLAG, OR THE TWO HALFS OF THE INTERFACE SPLIT USING THE "BREAK" FLAG - SEE ABOVE

ROOM/GROUP/AREA

ROOM
USE IF THIS MAKES THE SIGNAL FLOW MORE UNDERSTANDABLE.
IF MOST OF THE DRAWING SHOWS EQUIPMENT IN A CER, BUT A SMALL SECTION IS IN THE STUDIO, THEN THIS ROOM OUTLINE MAY BE HELPFUL.

STUDIO

MNEM
SUBTITLE
SUBTITLE 2
MAKE
MODEL
RK 000

MNEM
SUBTITLE
SUBTITLE 2
MAKE
MODEL
RK 000 FR ❂ SL #

LEGEND NOTES

NOTES 1, 2, AND 3 APPLIES TO ALL WIRING DIAGRAM DRAWINGS.

NOTES:

1. SIGNAL FLOW IS USUALLY FROM THE LEFT SIDE OF THE DRAWING TO THE RIGHT SIDE.
2. ALL VIDEO AND DIGITAL AUDIO CONNECTORS ARE 75 Ω BNC UNLESS OTHERWISE NOTED.
3. ALL ANALOG AUDIO AND TIME CODE CONNECTORS ARE XLR3 UNLESS OTHERWISE NOTED.

REFERENCE NOTE

REFERENCE CHARACTERS USED TO INCLUDE INFORMATION IN THE NOTES TABLE PERTAINING TO SPECIFIC AREAS OR ELEMENTS OF DRAWING. AN ADDITIONAL, IDENTICAL REFERENCE CHARACTER IS REQUIRED TO APPEAR AT THE LOCATION ON THE DRAWING CORRESPONDING TO NOTE.

(4) CONNECTOR TYPE LABELS (E.G. "D9P") APPLY TO THE CABLE CONNECTOR, NOT THE CONNECTOR ON THE EQUIPMENT.

(5) MAKE/MODEL OF EQUIPMENT INSTALLED DIRECTLY WITHOUT INTERCONNECTING CABLE.

MNEM
SUBTITLE
SUBTITLE 2
A
MAKE
MODEL
RK 000 FR ❂ SL #

DA WITH LOOP

DISTRIBUTION AMPLIFIER WITH LOOP THROUGH INPUT.
OUTPUTS ARE IN NUMERICAL ORDER.
1 OUT ON TOP THROUGH 8 OUT ON BOTTOM.

MNEM
SUBTITLE
SUBTITLE 2
MAKE
MODEL
RK 000 FR ❂ SL #

DA WITHOUT LOOP

DISTRIBUTION AMPLIFIER WITHOUT LOOP THROUGH INPUT.
OUTPUTS ARE IN NUMERICAL ORDER.
1 OUT ON TOP THROUGH 9 OUT ON BOTTOM.

MNEM
SUBTITLE
SUBTITLE 2
A
MAKE
MODEL
RK 000 FR ❂ SL #

MULTIPLE DA'S ON ONE CARD

LETTER IN CENTER OF DA IS EDITED AS REQUIRED
TYPICALLY 'A' OR 'B'

MNEM
SUBTITLE
SUBTITLE 2
MAKE
MODEL
RK 000 FR ❂ SL #

HD-SDI
DNCNV SD/NTSC
HD SDI
1 2 3 4 5 6 7 8

DISTRIBUTION AMPLIFIER WITH MONITORING DOWNCONVERSION

DISTRIBUTION AMPLIFIER WITH MONITORING DOWNCONVERSION.
STANDARD DISTRIBUTION AMPLIFIERS CAN ALSO BE REPRESENTED THIS WAY IF IT MAKES THE SIGNAL FLOW EASIER TO UNDERSTAND.

MNEM
SUB1
A
SUB2
B
MAKE
MODEL
RK 000 FR ❂ SL #

DUAL AES UNBALANCED DA

MNEM
SUB1
D9P A D9P
SUB2
D9P B D9P
MAKE
MODEL
RK 000 FR ❂ SL #

MNEM
SUB1
TB3 A TB3
SUB2
TB3 B TB3
MAKE
MODEL
RK 000 FR ❂ SL #

DUAL ANALOG AUDIO DA

VERSIONS SHOWN WITH 3 PIN TERMINAL BLOCKS AND WITH D9P.
CHANGE CONNECTOR TYPE / BREAKS DEPENDING ON VENDOR

SPKR
RK 000

SPEAKER

KYBD
DESKTOP

MSE
DESKTOP

KEYBOARD OR MOUSE

USE FOR STANDARD KEYBOARD/MOUSE THAT ARE ON A DESKTOP AND CLOSE TO THE COMPUTER OR KVM THEY ARE ATTACHED TO.

Copyright © 2012 Diversified Systems

DIVERSIFIED SYSTEMS

REV	DATE	DESCRIPTION	ENG
00	00/00/00	Initial Draft	F. LAST

ENG: A. SALKIN
DRAFTER: J. YOO
SCALE: NTS
UPDATED: 09/12/12 13:07:39
STATUS: AS-BUILT

C Arch

SHEET TITLE:
DIVERSIFIED SYSTEMS
FLAG STYLE DRAWING CONVENTION

SHEET: 1 OF 1 | FILENAME: 0001-09 VW Flag Style Drawing Conventions.dwg | REV LEVEL: 09

PROJECT NO. 106972
DRAWING NO. 0001

PLOT: Oct. 25, 2012 1:13 pm

Signal Types

HD	High Definition
SD	Standard Definition
SDI	Serial Digital Interface
HD-SDI	HD on Serial Digital Interface
SD-SDI	SD on Serial Digital Interface
NTSC	Analog Composite with Black and Burst
TC	Time Code
VGA	Analog computer display (all resolutions)
DVI	Digital Video Interface
HDMI	High Definition Multimedia Interface

Jackfields (Patch Panels)

DVJF	Digital Video Jackfield
AVJF	Analog Video Jackfield
DAJF	Digital Audio Jackfield
AAJF	Analog Audio Jackfield
CJF	Control Jackfield
TCJF	Timecode Jackfield
TXJF	Triax Jackfield
LBJF	L-Band Jackfield

Distribution Amps

VDA	Analog Video DA
ADA	Analog Audio DA
TCDA	Time Code DA
DVDA	Digital Video DA (HD, SD or HD/SD)
DMDA	Digital Monitoring DA (DVDA with mon outs)
DADA	Digital Audio DA
TCDA	Time Code DA
LBDA	LBand DA

Routers / Switchers / Mixers

SDI RTR	HD/SD SDI router
AES RTR	AES router
VID RTR	Analog Video router
AUD RTR	Analog Audio router
CTL RTR	RS422 router
TC RTR	Timecode router
SWR	Video Switcher
MXR	Audio Mixer
SWX	General Purpose Switch (e.g. a 2x1 mechanical A/B switch)

Control Panels

CP	Control Panel (used with other abbrevations)
RTR CP	Router Control Panel
ICM CP	Intercom Control Panel
REM CP	Remote Control Panel (generic, non camera)

Cameras

CAM	Camera
CCU	Camera Control Unit
CNU	Camera Network Unit
MSU	Master Setup Unit
RCP	Remote Control Panel

Sources

CD	CD Player
CD-R	CD Recorder
VTR	Video Tape Recorder
VHS	VHS Player / Recorder
DDR	Digital Disk Recorder
DVD	Digital Video Disk Player (or Recorder)
EVS	EVS Server
SVR	Generic Video / Audio server
CG	Character Generator
GFX	Generic Graphics Device

Video Conversion and Processing

FR	Peripheral Frame
D>A	SDI to Analog Component or NTSC
A>D	Analog Component or NTSC to SDI
VDLY	Video Delay
COR	Color Corrector
SCAN	Scan Converter
ENC	Encoder
DEC	Decoder
KYR	Keyer
FS	Frame Sync
DNCNV	Down Converter
UPCNV	Up Converter
XCNV	Cross Converter
PROC	Other Video Processing Unit
MUX	Video / Audio Multiplexor (Embedder)
DMUX	Video / Audio De-multiplexor (De-embedder)

Audio Conversion and Processing

FR	Peripheral Frame
D>A	Digital Audio (AES) to Analog Audio Converter
A>D	Analog Audio to Digital Audio (AES) Converter
ADLY	Audio Delay
MATCH	Match Amp (Bal/Unbal converter)
SUM	Stereo to Mono summing unit (active or passive)
AFX	Audio Effects unit
AMP	Audio Amplifier
VCA	Voltage Controlled Amp (e.g Oxmoor)
VOL	Volume Control
MIC	Microphone
SPK	Speaker
HDPH	Headphones
AES	48kHz Broadcast Standard Digital Audio
MADI	Multichannel Audio Digital Interface
DLB	Dolby
DLB ENC	Dolby Encoder
DLB DEC	Dolby Decoder
PROC	Audio Processor
L / R	Left / Right Channel
C	Center Channel
SUB	Subwoofer Channel
LS / RS	Left / Right Surround Channel
BSL / BSR	Back Surround Left / Right Channel (7.1 systems)

Intercom

ICM MTX	Intercom Matrix
ICM CP	Intercom Control Panel
PL	Party Line (2wire)
IFB	Interrupt Foldback
WL IFB	Wireless Interrupt Foldback
2W/4W	2-wire to 4-wire interface

Computers

MON	Computer monitor
KYBD	Keyboard
MSE	Mouse
KVM EXT	KVM extender - point-point local end
KVM REM	KVM extender - point-point remote end
KVM MTX	KVM Matrix
KVM TX	KVM Transmitter (connected to computer) in KVM matrix
KVM USR	KVM User station in a KVM matrix
SVR	Server (computer running server end of client-server app)
PC	Computer (running user applications)
EHUB	Ethernet Hub
ESWR	Ethernet Switch
ERTR	Ethernet Router
WAP	Wireless Access Point
RAID	RAID storage unit
JBOD	JBOD unit (Just a Bunch Of Disks)
SAN	Storage Area Network
NAS	Network Attached Storage
STORE	Other generic storage system

Monitoring

MON	Video Monitor (CRT, LCD or Projector)
MON CP	Monitor Control Panel
MVP	Multi Video Processor (Evertz MVP)
MIP	Multi Image Processor (Other)
AMON	Audio Monitor
SPK	Speaker
UMD	Under Monitor Display
WFM	Waveform Monitor (Video or Audio)
MTR	Meter
QC	Quality Control Station

RF

ANT	Antenna
LNB	Low Noise Block with built in down converter
DISH	Satellite Dish
SAT	Satellite
MATV	In House TV transmission
TX	Transmission, Transmit
CH	Channel
MOD	Modulator
DEMOD	Demodulator
RX	Receiver
IRD	Satellite Receive (with decoder built in)
TNR	Tuner
AMP	RF Amplifier
COMB	RF Combiner (passive or active)
SPLIT	RF Splitter (passive or active)
PAD	RF Attenuator
WL	Wireless (used with other abbreviations, e.g. WL MIC)

Fiber

FBR	Fiber
FBR TX	Fiber Transmit (Electrical to Optical)
FBR RX	Fiber Receive (Optical to Electrial)
MUX	Optical Mux (CWDM or DWDM)
DMUX	Optical DMUX (CWDM or DWDM)
SPLIT	Optical Splitter

Miscellaneous

ACO	Automatic Changeover
CLK	Clock
CTL	Control
EFX	Effects
PWR	Power
SPG	Sync Pulse Generator
TLY	Tally

Interfaces and Panels

I/F	Interface
FR	Peripheral Frame
IOPNL	Input / Output Connector Panel
BOP	Breakout Panel
PB	Punch Block
TB	Terminal Block

In Filenames (after drawing number-rev)

CON	Conceptual Diagram
FP	Floor plans and other architectural drawings
EL	Rack and Console Elevations
VW	Video Wiring Diagrams
AW	Audio Wiring Diagrams
ICM	Intercom Wiring Diagrams
CW	Control Wiring Diagrams
JF	Jackfield Elevations
IO	I/O Panels
LBL	Labels
CF	Custom Fabrication

Copyright © 2012 Diversified Systems

DIVERSIFIED SYSTEMS

REV	DATE	DESCRIPTION	ENG
00	11/19/09	Initial Draft	A. SALKIN

ENG: A. SALKIN
DRAFTER: A. SALKIN
SCALE: NTS
UPDATED: 11/19/09 18:50:14
STATUS: APPROVED

C Arch

SHEET TITLE: ABBREVIATIONS BY FUNCTION

SHEET: 1 OF 1 | FILENAME: 0005-00 Abbreviations by function.dwg | REV LEVEL: 00

PROJECT NO. 106792
DRAWING NO. 0005

PLOT: Oct. 25, 2012 1:13 pm

A

A>D	Analog to Digital Converter.
AAJF	Analog Audio Jackfield
ACO	Automatic Changeover
ADA	Analog Audio DA
ADLY	Audio Delay
AES	48kHz Broadcast Standard Digital Audio
AES RTR	AES router
AFX	Audio effects unit
AMON	Audio Monitor
AMP	Amplifier
ANT	Antenna
AUD RTR	Analog Audio router
AVJF	Analog Video Jackfield
AW	Audio Wiring Diagrams (in filenames)

B

BOP	Breakout Panel
BSL / BSR	Back Surround Left / Right Channel (7.1 systems)

C

C	Center Channel
CAM	Camera
CCU	Camera Control Unit
CD	CD Player
CD-R	CD Recorder
CF	Custom Fabrivation (in filenames)
CG	Character Generator
CH	Channel
CJF	Control Jackfield
CLK	Clock
CNU	Camera Network Unit
COMB	RF Combiner (passive or active)
CON	Conceptual drawing (in filenames)
COR	Color Corrector
CP	Control Panel
CTL	Control
CTL RTR	RS422 router
CW	Control Wiring Diagrams (in filenames)

D

D>A	Digital to Analog Converter
DADA	Digital Audio DA
DAJF	Digital Audio Jackfield
DDR	Digital Disk Recorder
DEC	Decoder
DEMOD	Demodulator
DISH	Satellite Dish
DLB	Dolby
DLB DEC	Dolby Decoder
DLB ENC	Dolby Encoder
DMDA	Digital Video DA with Mon outs
DMUX	De-multiplexor
DNCNV	Down Converter
DVD	Digital Video Disk Player (or Recorder)
DVDA	Digital Video DA (HD, SD or HD/SD)
DVI	Digital Video Interface
DVJF	Digital Video Jackfield

E

EHUB	Ethernet Hub
EL	Rack and Console Elevations (in filenames)
EFX	Effects unit
ENC	Encoder
ERTR	Ethernet Router
ESWR	Ethernet Switch
EVS	EVS Server

F

FBR	Fiber
FBR RX	Fiber Receive (Optical to Electrial)
FBR TX	Fiber Transmit (Electrical to Optical)
FP	Floor plans and other architectural drawings
FR	Peripheral Frame
FS	Frame Sync

G

GFX	Generic Graphics Device

H

HD	High Definition
HDCP	High Definition Copy Protection
HDMI	High Definition Multimedia Interface
HDPH	Headphones
HD-SDI	HD on Serial Digital Interface

I

I/F	Interface
ICM	Intercom Wiring Diagrams
ICM CP	Intercom Control Panel
ICM CP	Intercom Control Panel
ICM MTX	Intercom Matrix
IFB	Interrupt Foldback
IOPNL	Input / Output connector Panel
IRD	Satellite Receiver (with decoder built in)

J

JF	Jackfield Elevations (in filenames)
JBOD	JBOD unit (Just a Bunch of Disks)

K

KVM EXT	KVM extender local end
KVM MTX	KVM Matrix
KVM REM	KVM extender - point-point remote end
KVM TX	
KVM USR	KVM user station in a KVM matrix
KYBD	Keyboard
KYR	KVM transmiter (connected to computer) in KVM matrix

L

L / R	Left / Right Channel
LBDA	LBand DA
LBJF	L-Band Jackfield
LBL	Labels (in filenames)
LNB	Low Noise Block with built in down converter
LS / RS	Left / Right Surround Channel

M

MADI	Multichannel Audio Digital Interface
MATCH	Match Amp (Bal/Unbal converter)
MATV	In House TV transmission
MIC	Microphone
MIP	Multi Image Processor (MVP, VIP, Kaleido etc)
MOD	Modulator
MON	Monitor
MON CP	Monitor Control Panel
MSE	Mouse
MSU	Master Setup Unit
MTR	Meter
MUX	Multiplexor
MVP	Multi Video Processor (Evertz)
MXR	Audio Mixer

N

NAS	Network Attached Storage
NTSC	Analog Composite with Black and Burst
NTSC RTR	NTSC Router

P

PAD	RF Attenuator
PB	Punch Block
PC	Computer (running user applications)
PL	Party Line (2wire)
PROC	Processor
PSU	Power Supply
PWR	Power

Q

QC	Quality Control Station

R

RAID	RAID Storage unit
RCP	Remote Control Panel (Camera)
REM CP	Remote Control Panel (generic)
RK	Rack
RTR CP	Router Control Panel
RX	Receiver

S

SAN	Storage Area Network
SAT	Satellite
scan	Scan Converter
SD	Standard Definition
SDI	Serial Digital Interface
SDI RTR	HD/SD SDI router
SD-SDI	SD on Serial Digital Interface
SL	Slot (in peripheral frames)
SPG	Sync Pulse Generator
SPK	Speaker
SPLIT	Splitter (passive or active)
STORE	Generic Storage
SUB	Subwooder Channel
SUM	Stereo to Mono summing unit (active or passive)
SVR	Server (Video/Audio or running server side applications)
SWR	Video Switcher
SWX	General Purpose Switch (e.g. a 2x1 mechanical A/B switch)

T

TB	Terminal Block
TC	Time Code
TC RTR	Timecode router
TCDA	Time Code DA
TCJF	Timecode Jackfield
TLY	Tally
TNR	Tuner
TX	Transmission, Transmit
TXJF	Triax Jackfield

U

UMD	Under Monitor Display
UPCNV	Up Converter
UPS	Uninteruptable Power Supply

V

VCA	Voltage Controlled Amp (e.g Oxmoor)
VDA	Analog Video DA
VDLY	Video Delay
VGA	Analog computer display (all resolutions)
VHS	VHS Player / Recorder
VOL	Volume Control
VTR	Video Tape Recorder
VW	Video Wiring Diagrams

W

WAP	Wireless Access Point
WFM	Waveform Monitor (Video or Audio)
WL	Wireless
WL IFB	Wireless Interrupt Foldback

X

XCNV	Cross Converter

#

2W/4W	2-wire to 4-wire interface

Copyright © 2012 Diversified Systems

DIVERSIFIED SYSTEMS

REV	DATE	DESCRIPTION	ENG
00	11/20/09	Initial Draft	A. SALKIN

ENG: A. SALKIN
DRAFTER: A. SALKIN
SCALE: NTS
UPDATED: 11/19/09 09:43:34
STATUS: APPROVED

C Arch

SHEET TITLE: ABBREVIATIONS IN ALPHABETICAL ORDER

SHEET: 1 OF 1 | FILENAME: 0006-00 Abbreviations in Alpha.dwg | REV LEVEL: 00

PROJECT NO. 106792
DRAWING NO. 0006

PLOT: Oct. 25, 2012 1:14 pm

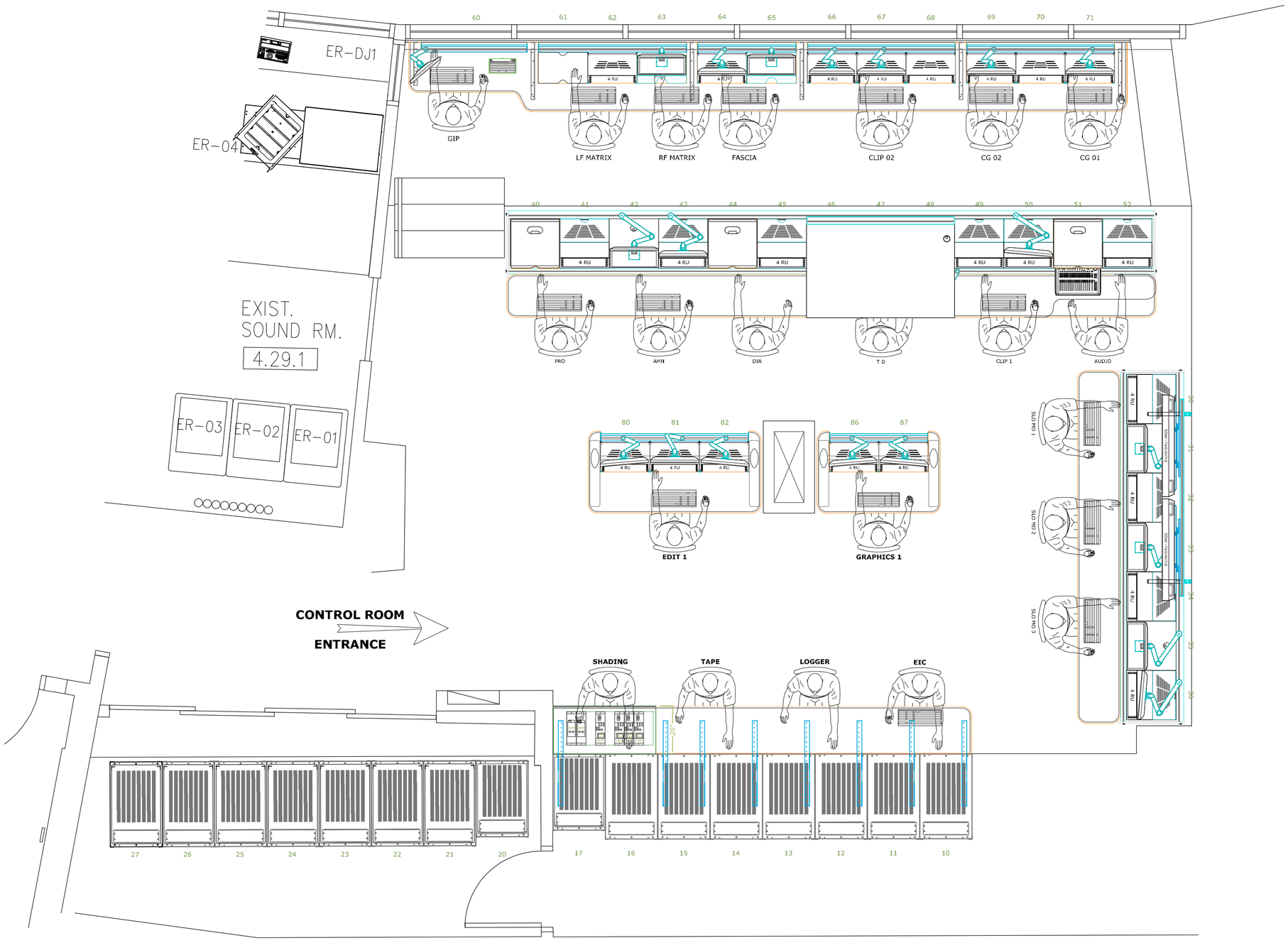

Copyright © 2012 Diversified Systems

DIVERSIFIED SYSTEMS

REV	DATE	DESCRIPTION	ENG

ENG: M. MEGLATHERY
DRAFTER: M. MEGLATHERY
SCALE: NTS
UPDATED: 01/25/12 09:22:20
STATUS: **AS-BUILT**

C Arch

SHEET TITLE:

SCOREBOARD CONTROL ROOM FLOOR PLAN

SHEET: 1 OF 1
FILENAME: 0101-00 FP SCOREBOARD CONTROL ROOM.dwg
REV LEVEL: 00

PROJECT NO. 106792
DRAWING NO. 0101

PLOT: Oct. 25, 2012 1:15 pm

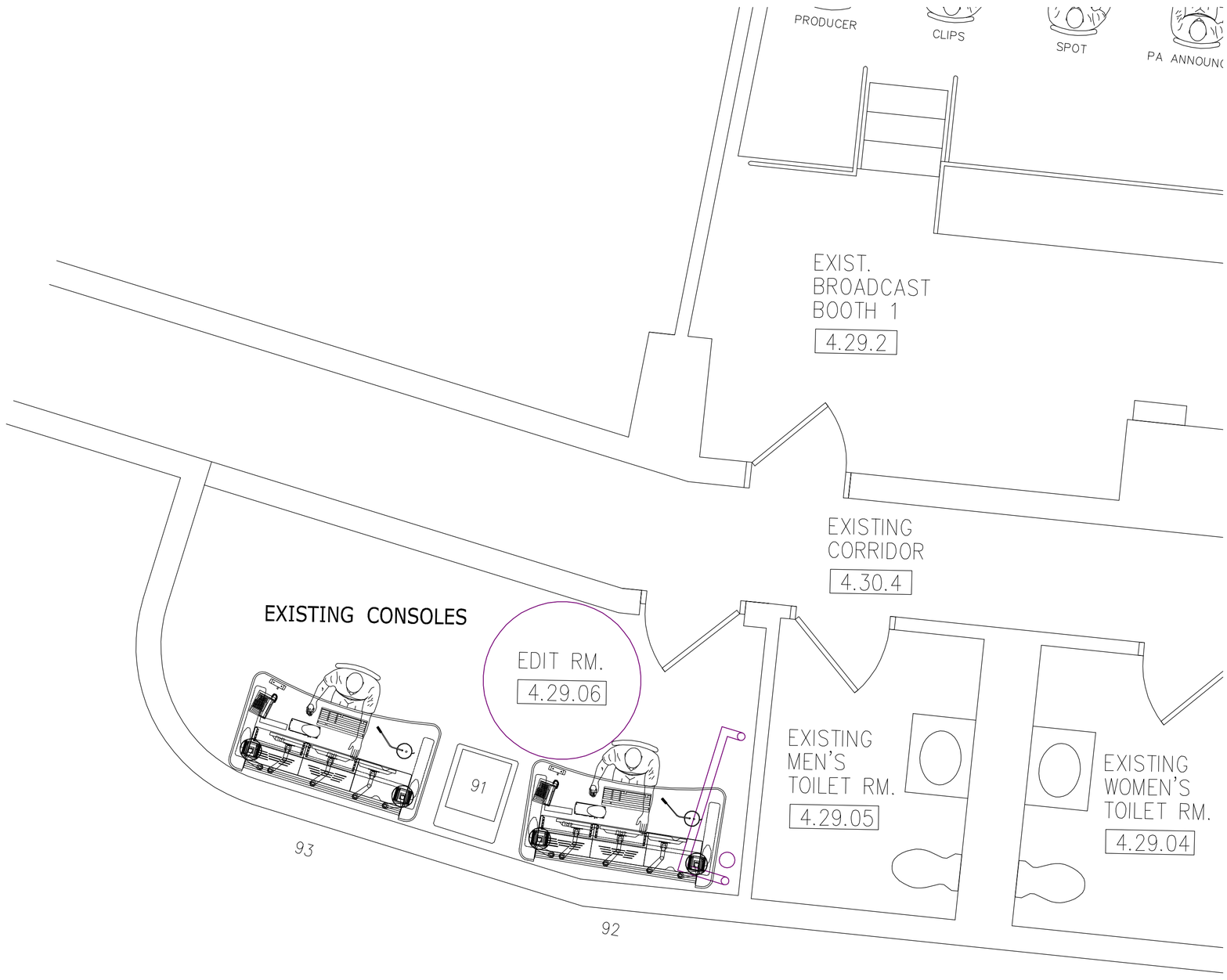

DIVERSIFIED
SYSTEMS

REV	DATE	DESCRIPTION	ENG

ENG: M. MEGLATHERY
DRAFTER: M. MEGLATHERY
SCALE: NTS
UPDATED: 12/01/11 10:43:17
STATUS: AS-BUILT

C Arch

SHEET TITLE:
SCOREBOARD EDIT ROOM
FLOOR PLAN

SHEET: 1 OF 1
FILENAME: 0103-00 FP SCOREBOARD EDIT ROOM.dwg
REV LEVEL: 00

PROJECT NO. 106792
DRAWING NO. 0103

PLOT: Oct. 25, 2012 1:13 pm

Copyright © 2012 Diversified Systems

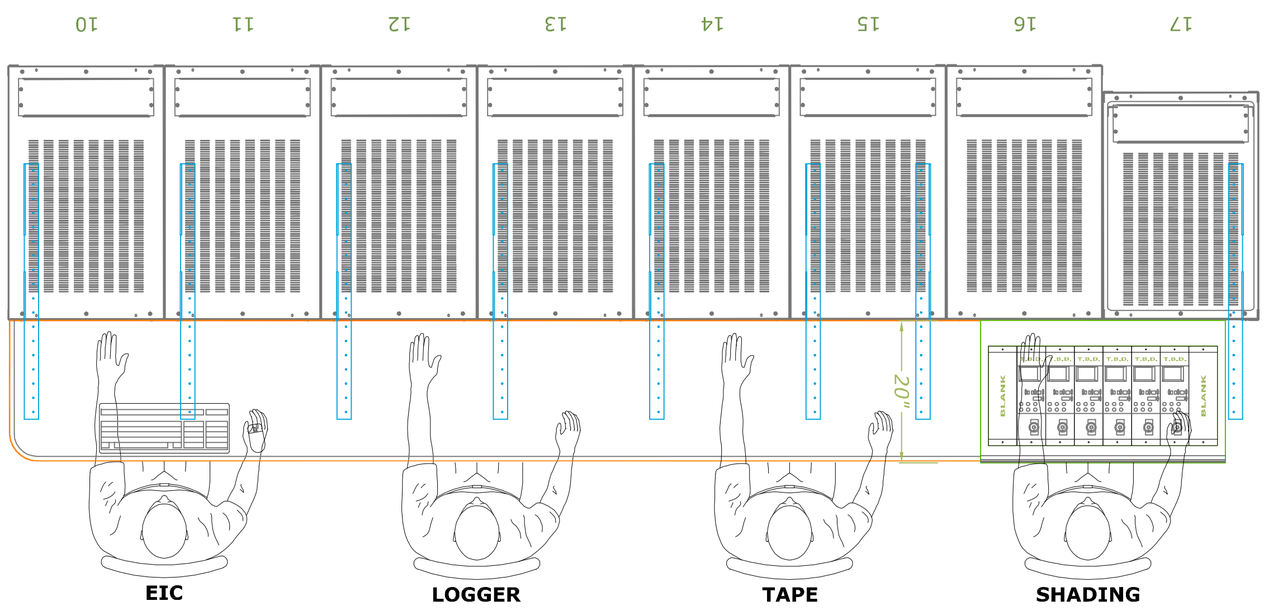

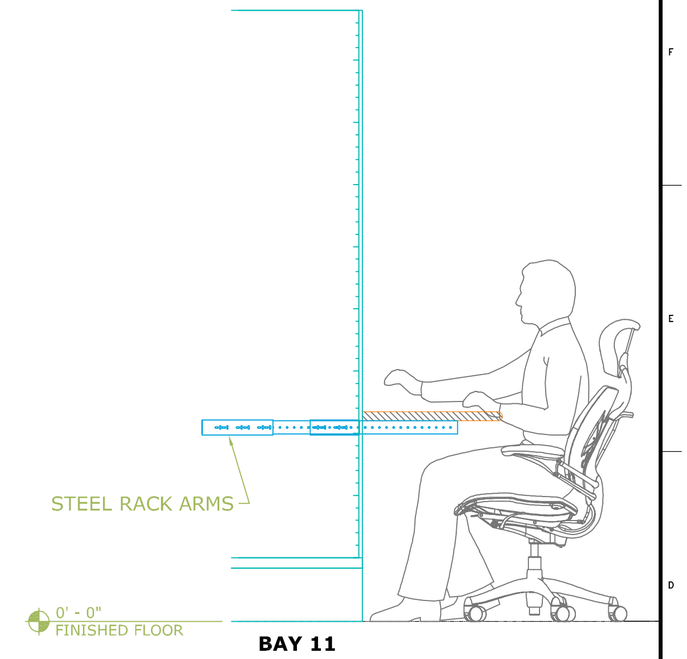

BAY 11

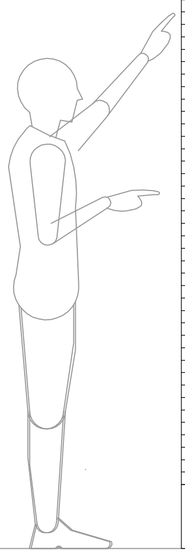

INCHES	RU
86.00	44
84.25	43
82.50	42
80.75	41
79.00	40
77.25	39
75.50	38
73.75	37
72.00	36
70.25	35
68.50	34
66.75	33
65.00	32
63.25	31
61.50	30
59.75	29
58.00	28
56.25	27
54.50	26
52.75	25
51.00	24
49.25	23
47.50	22
45.75	21
44.00	20
42.25	19
40.50	18
38.75	17
37.00	16
35.25	15
33.50	14
31.75	13
30.00	12
28.25	11
26.50	10
24.75	9
23.00	8
21.25	7
19.50	6
17.75	5
16.00	4
14.25	3
12.50	2
10.75	1
7.50	

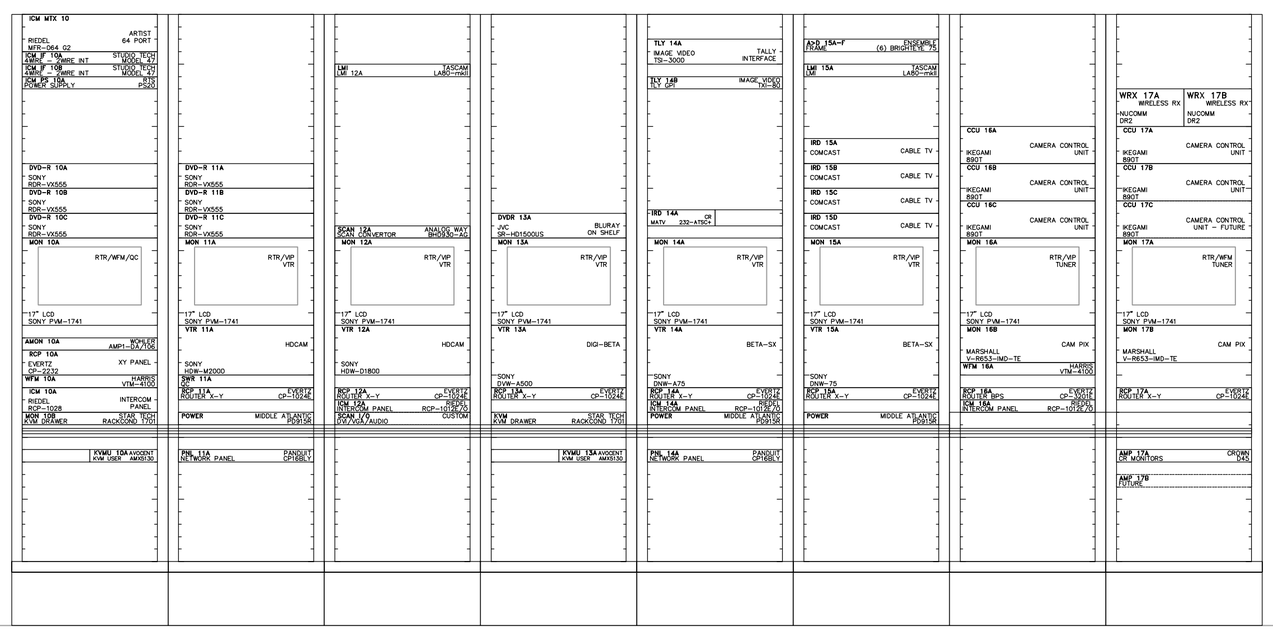

RK 10 RK 11 RK 12 RK 13 RK 14 RK 15 RK 16 RK 17

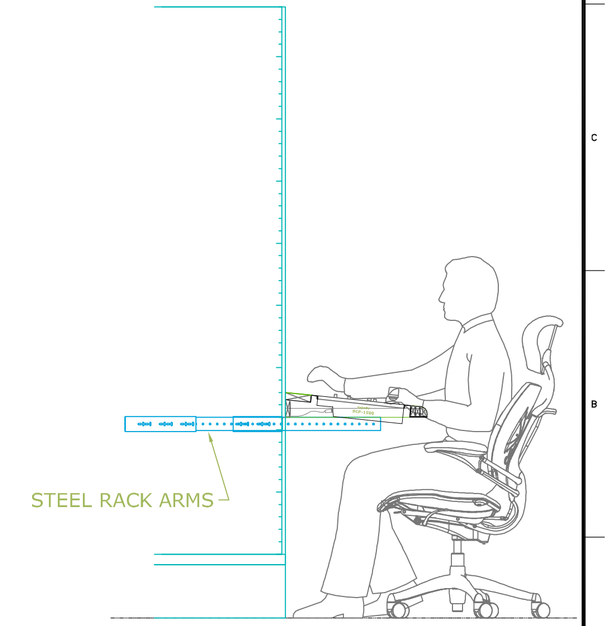

BAY 16

SECTION VIEWS

Copyright © 2012 Diversified Systems

DIVERSIFIED SYSTEMS

REV	DATE	DESCRIPTION	ENG

ENG: M. MEGLATHERY
DRAFTER: M. MEGLATHERY
SCALE: NTS
UPDATED: 01/25/12 09:52:13
STATUS: AS-BUILT

C Arch

SHEET TITLE: CONTROL ROOM RACKS 10–17 RACK ELEVATION – FRONT

SHEET: 1 OF 1 FILENAME: 0111-00 EL RACKS 10-17 FRONT.dwg REV LEVEL: 00

PROJECT NO. 106792
DRAWING NO. 0111

PLOT: Oct. 25, 2012 1:14 pm

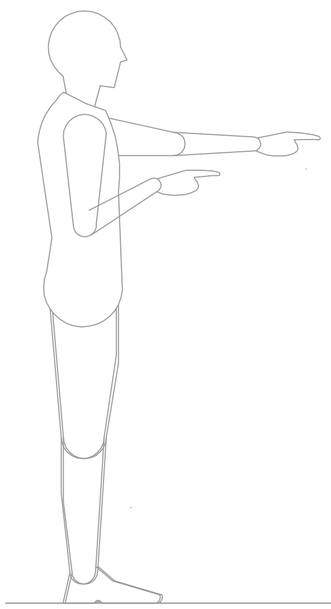

INCHES	RU
78.50	44
76.75	43
75.00	42
73.25	41
71.50	40
69.75	39
68.00	38
66.25	37
64.50	36
62.75	35
61.00	34
59.25	33
57.50	32
55.75	31
54.00	30
52.25	29
50.50	28
48.75	27
47.00	26
45.25	25
43.50	24
41.75	23
40.00	22
38.25	21
36.50	20
34.75	19
33.00	18
31.25	17
29.50	16
27.75	15
26.00	14
24.25	13
22.50	12
20.75	11
19.00	10
17.25	9
15.50	8
13.75	7
12.00	6
10.25	5
8.50	4
6.75	3
5.00	2
3.25	1
1.50	

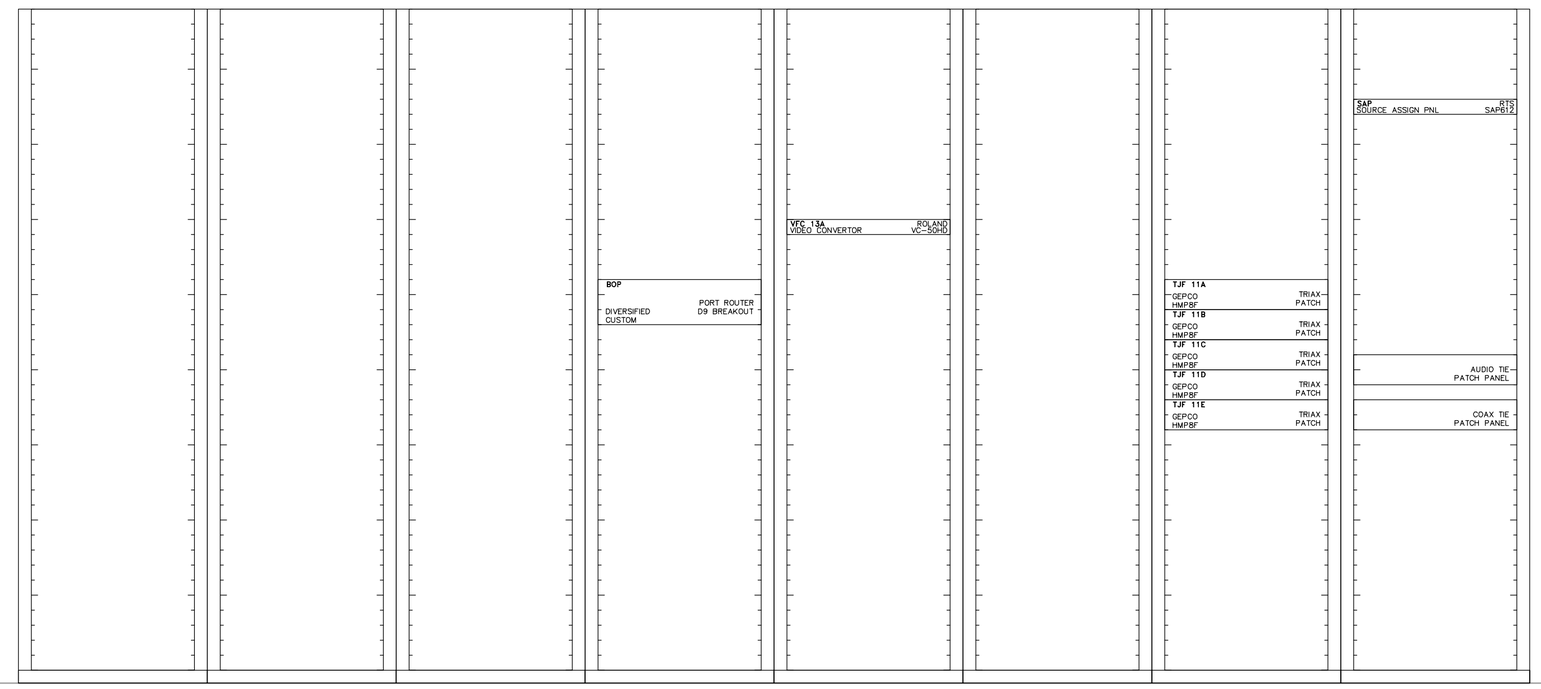

Copyright © 2012 Diversified Systems

DIVERSIFIED SYSTEMS

REV	DATE	DESCRIPTION	ENG

ENG: M. MEGLATHERY
DRAFTER: M. MEGLATHERY
SCALE: NTS
UPDATED: 12/01/11 12:11:05
STATUS: AS-BUILT

C Arch

SHEET TITLE:
EQUIPMENT ROOM RACKS 10–17
RACK ELEVATION – REAR

SHEET: 1 OF 1
FILENAME: 0112-00 EL RACKS 10-17 REAR.dwg
REV LEVEL: 00

PROJECT NO. 106792
DRAWING NO. 0112

PLOT: Oct. 25, 2012 1:15 pm

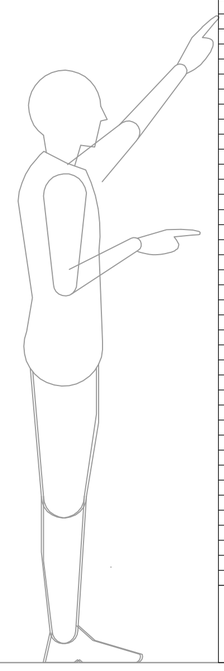

INCHES	RU
86.00	44
84.25	43
82.50	42
80.75	41
79.00	40
77.25	39
75.50	38
73.75	37
72.00	36
70.25	35
68.50	34
66.75	33
65.00	32
63.25	31
61.50	30
59.75	29
58.00	28
56.25	27
54.50	26
52.75	25
51.00	24
49.25	23
47.50	22
45.75	21
44.00	20
42.25	19
40.50	18
38.75	17
37.00	16
35.25	15
33.50	14
31.75	13
30.00	12
28.25	11
26.50	10
24.75	9
23.00	8
21.25	7
19.50	6
17.75	5
16.00	4
14.25	3
12.50	2
10.75	1
7.50	

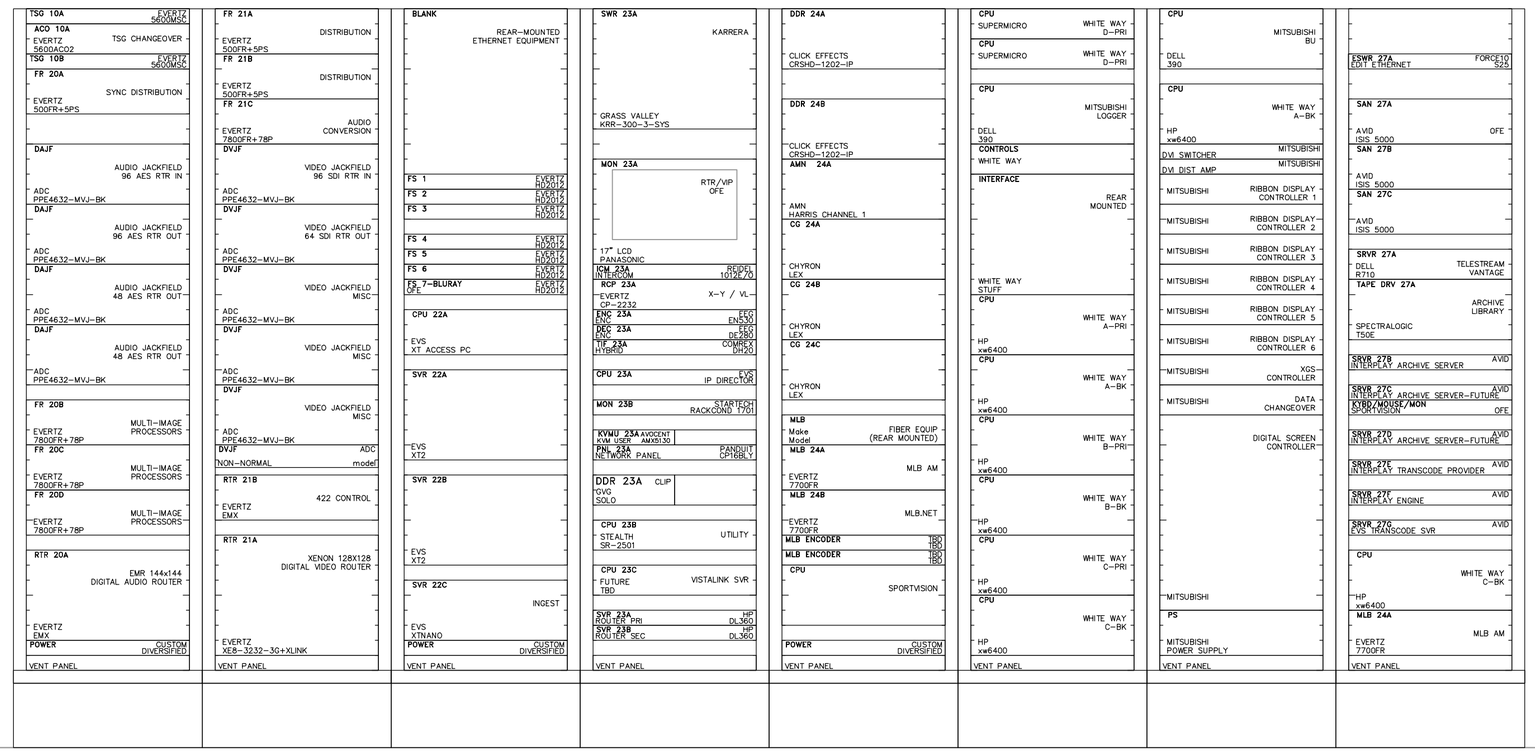

Copyright © 2012 Diversified Systems

DIVERSIFIED SYSTEMS

REV	DATE	DESCRIPTION	ENG

ENG: M. MEGLATHERY
DRAFTER: M. MEGLATHERY
SCALE: NTS
UPDATED: 01/16/12 16:27:48
STATUS: **AS-BUILT**

C Arch

SHEET TITLE:

CONTROL ROOM RACKS 20-27 RACK ELEVATION – FRONT

SHEET: 1 OF 1 | FILENAME: 0113-00 EL RACKS 20-27 FRONT.dwg | REV LEVEL: 00

PROJECT NO. 106792

DRAWING NO. 0113

PLOT: Oct. 25, 2012 1:15 pm

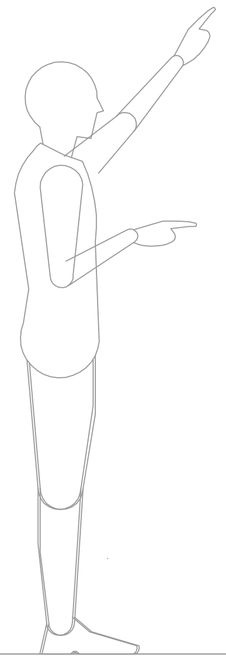

INCHES	RU
78.50	44
76.75	43
75.00	42
73.25	41
71.50	40
69.75	39
68.00	38
66.25	37
64.50	36
62.75	35
61.00	34
59.25	33
57.50	32
55.75	31
54.00	30
52.25	29
50.50	28
48.75	27
47.00	26
45.25	25
43.50	24
41.75	23
40.00	22
38.25	21
36.50	20
34.75	19
33.00	18
31.25	17
29.50	16
27.75	15
26.00	14
24.25	13
22.50	12
20.75	11
19.00	10
17.25	9
15.50	8
13.75	7
12.00	6
10.25	5
8.50	4
6.75	3
5.00	2
3.25	1
1.50	

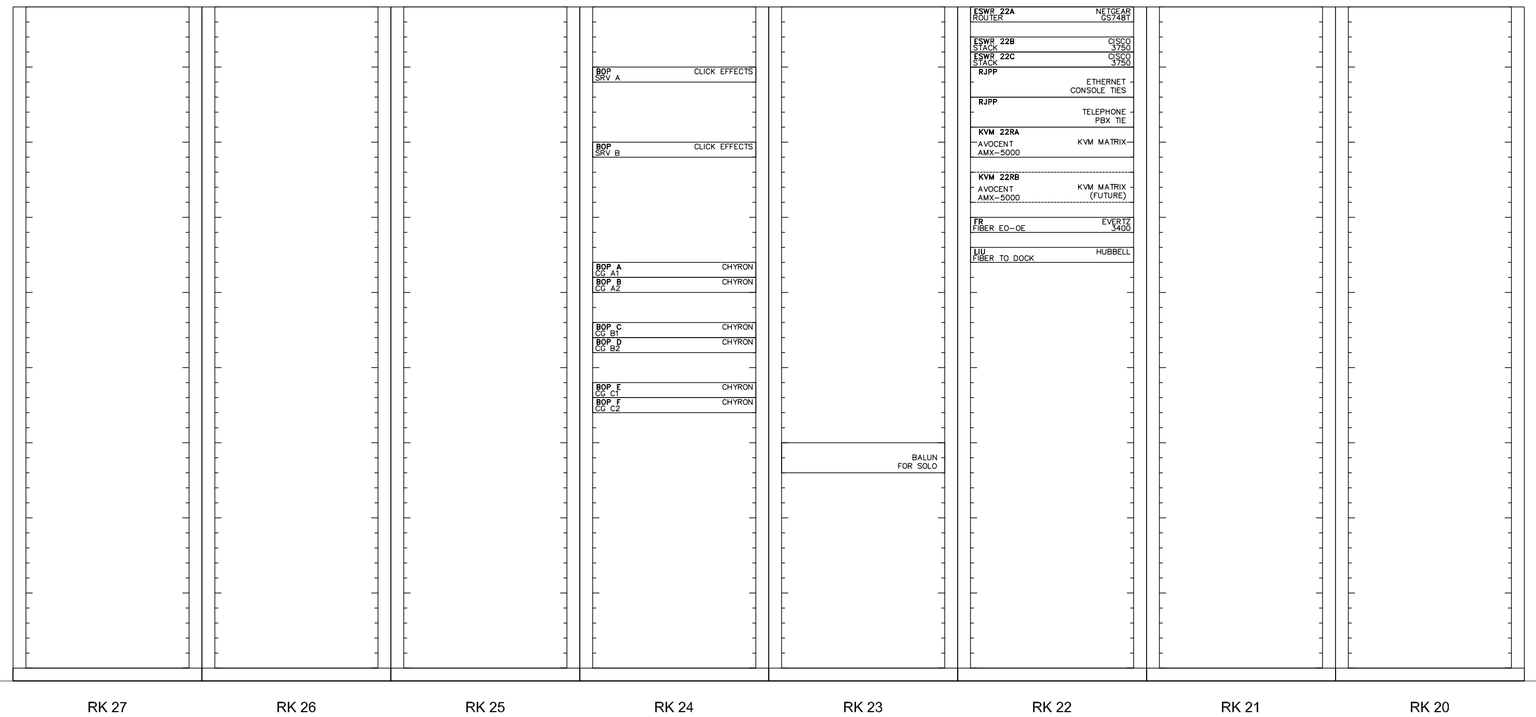

Copyright © 2012 Diversified Systems

DIVERSIFIED SYSTEMS

REV	DATE	DESCRIPTION	ENG

ENG: M. MEGLATHERY
DRAFTER: M. MEGLATHERY
SCALE: NTS
UPDATED: 01/16/12 15:31:15
STATUS: AS-BUILT

C Arch

SHEET TITLE:

EQUIPMENT ROOM RACKS 20–27 RACK ELEVATION – REAR

SHEET: 1 OF 1
FILENAME: 0114-00 EL RACKS 20-27 REAR.dwg
REV LEVEL: 00

PROJECT NO. 106792
DRAWING NO. 0114

PLOT: Oct. 25, 2012 1:15 pm

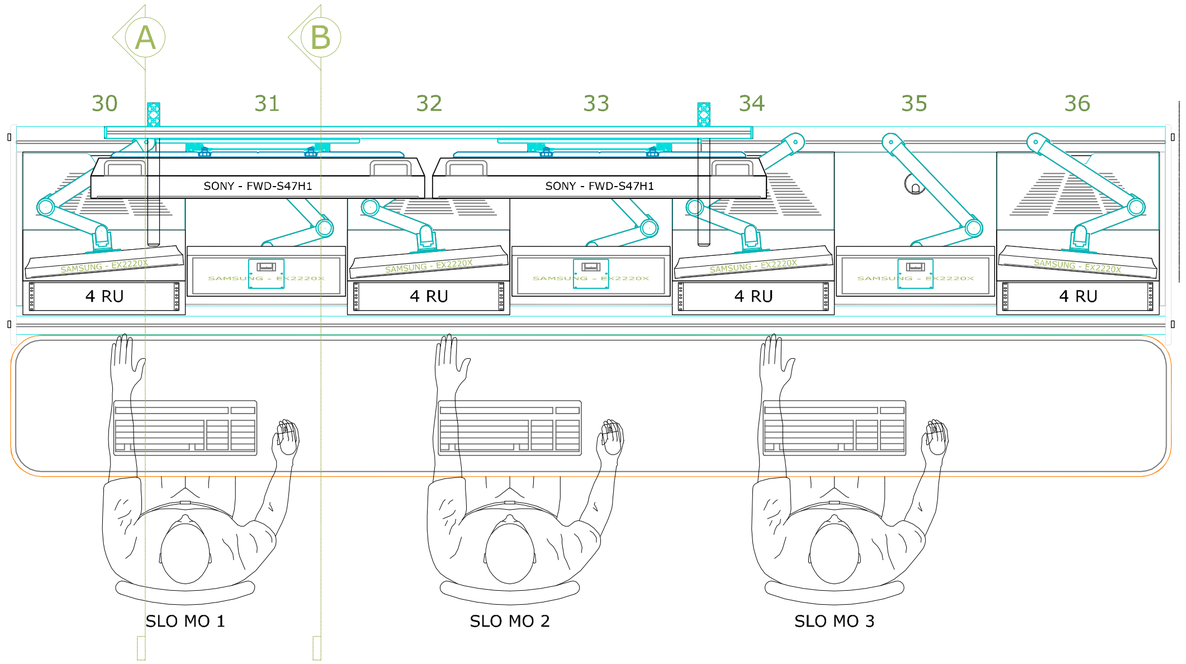

PLAN VIEW

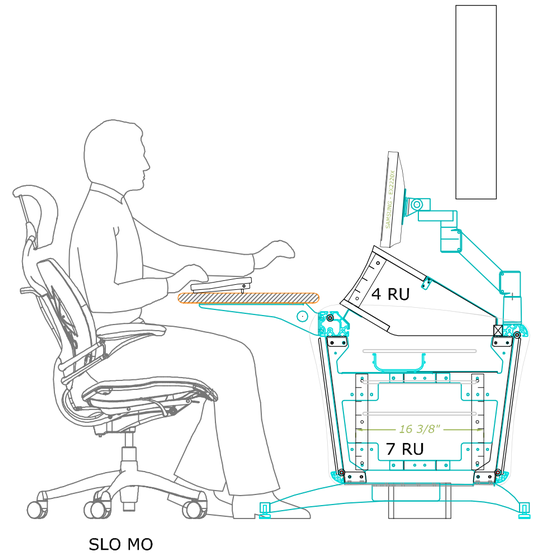

SECTION - A

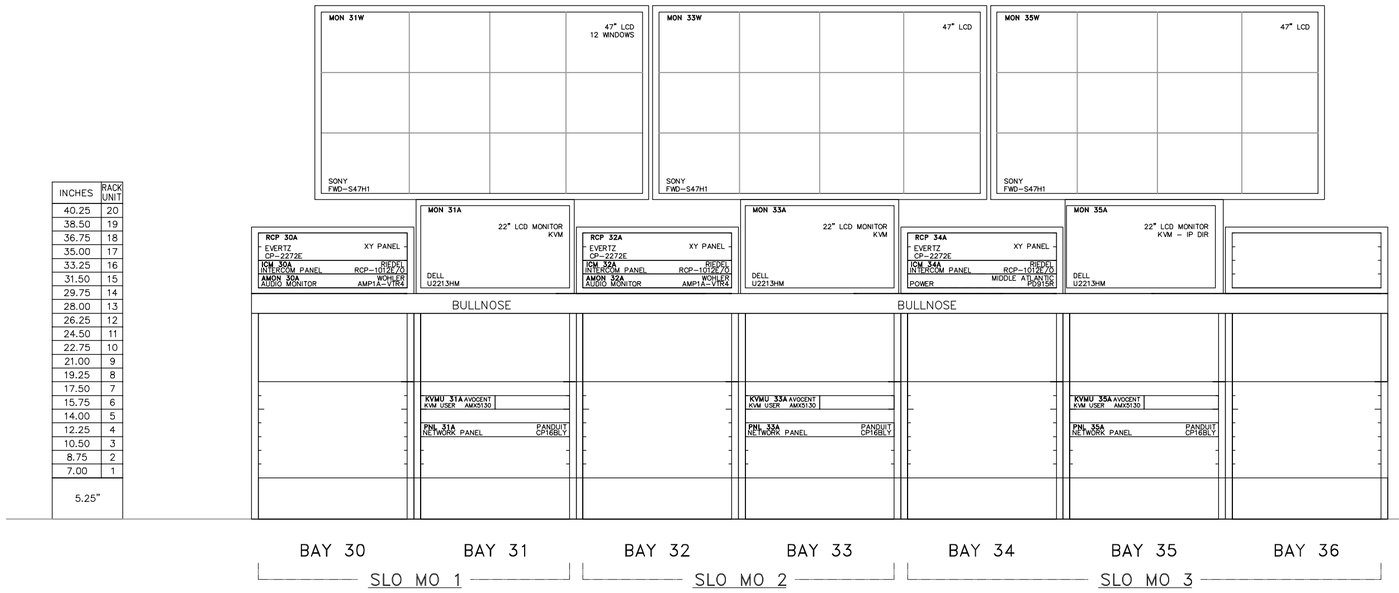

FRONT VIEW

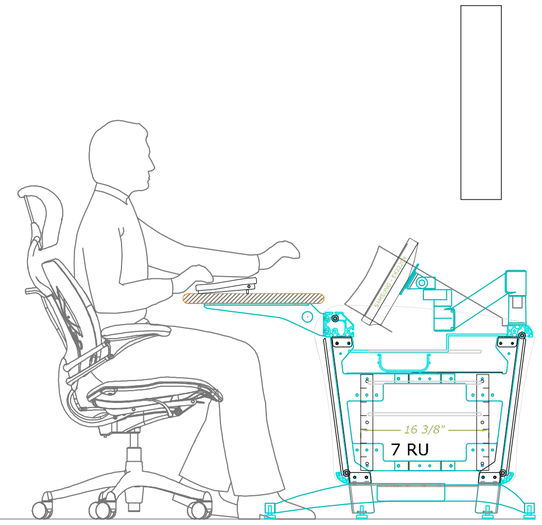

SECTION - B

Copyright © 2012 Diversified Systems

DIVERSIFIED SYSTEMS

REV	DATE	DESCRIPTION	ENG

ENG: M. MEGLATHERY
DRAFTER: M. MEGLATHERY
SCALE: NTS
UPDATED: 12/19/11 14:45:21
STATUS: **AS-BUILT**

C Arch

SHEET TITLE: CONTROL ROOM CONSOLE 30–36 ELEVATION

SHEET: 1 OF 1 | FILENAME: 0115-00 EL CONSOLE 30-36.dwg | REV LEVEL: 00

PROJECT NO. 106792

DRAWING NO. 0115

PLOT: Oct. 25, 2012 1:16 pm

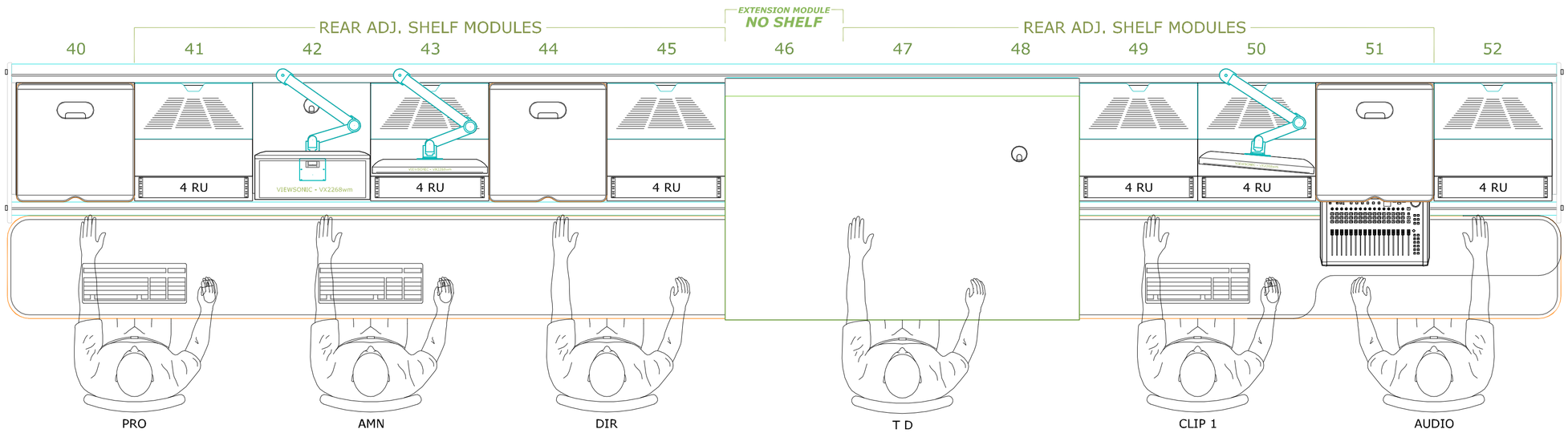

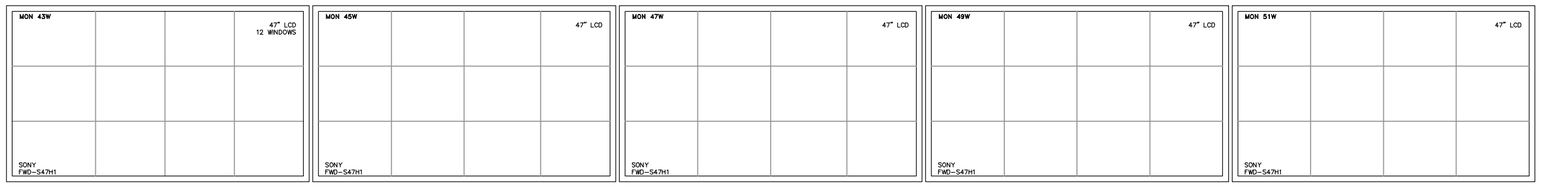

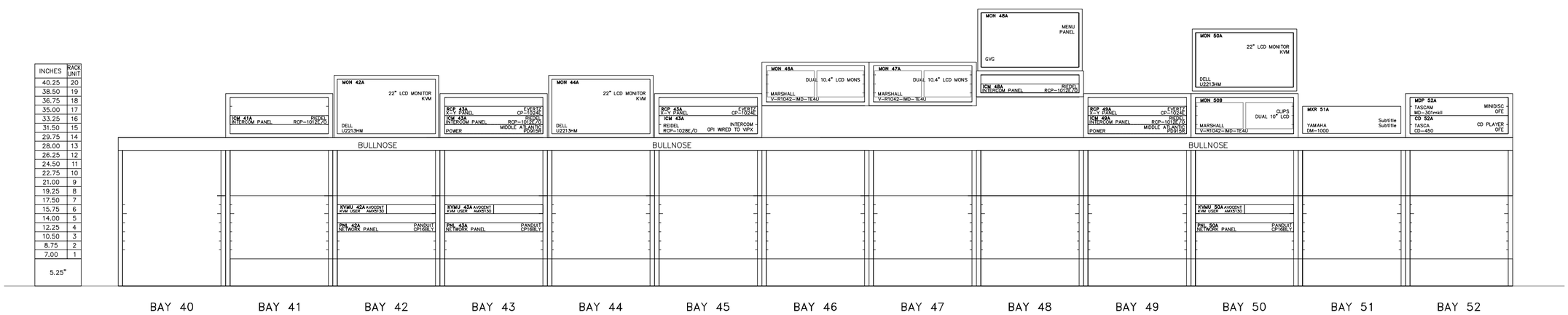

DIVERSIFIED
SYSTEMS

REV	DATE	DESCRIPTION	ENG

ENG: M. MEGLATHERY
DRAFTER: M. MEGLATHERY
SCALE: NTS
UPDATED: 12/19/11 12:17:04
STATUS: **AS-BUILT**

C
Arch

SHEET TITLE:

CONTROL ROOM CONSOLE 40–52 ELEVATION

SHEET: 1 OF 1
FILENAME: 0117-00 EL CONSOLE 40-52.dwg
REV LEVEL: 00

PROJECT NO. 106792
DRAWING NO. 0117

PLOT: Oct. 25, 2012 1:16 pm

Copyright © 2012 Diversified Systems

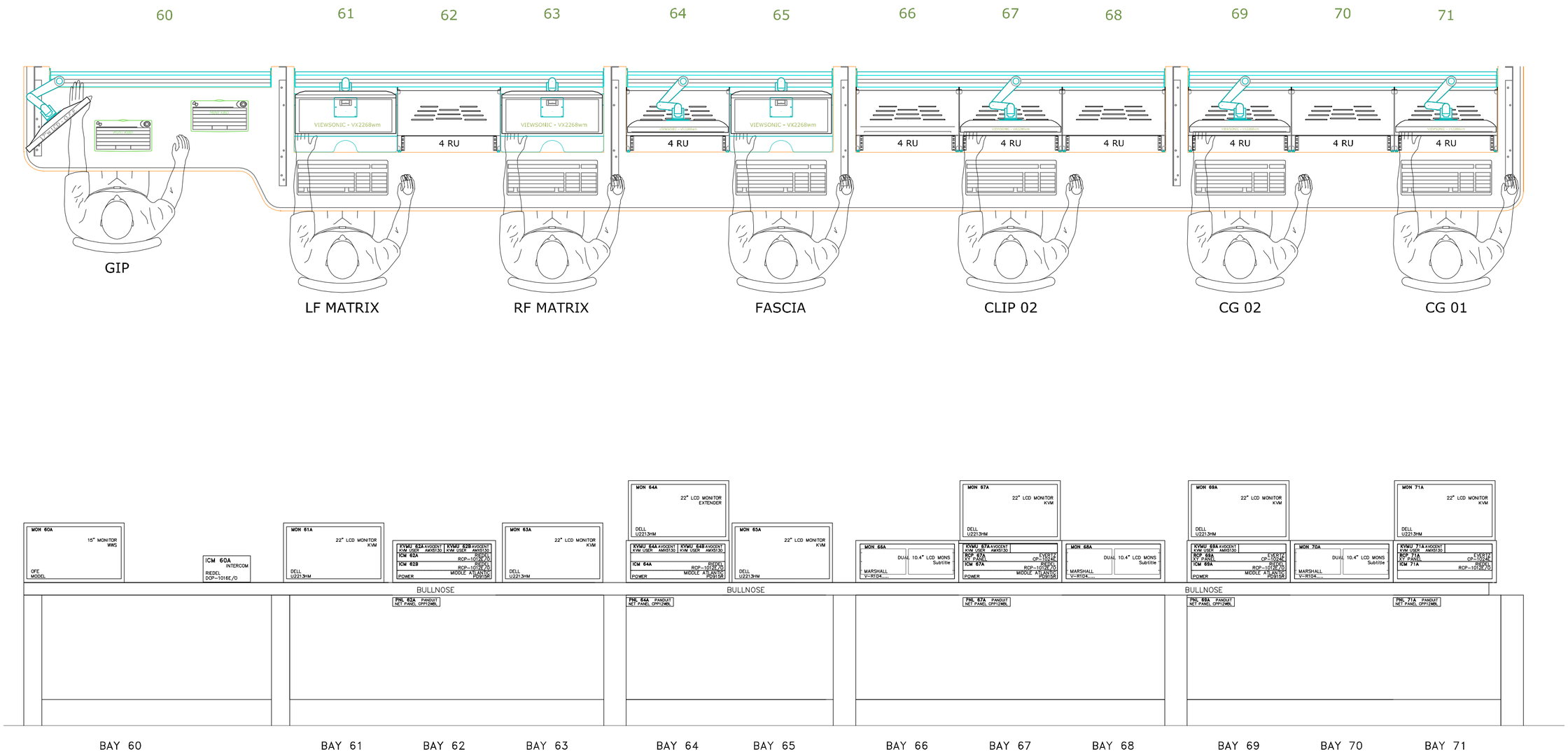

DIVERSIFIED SYSTEMS

REV	DATE	DESCRIPTION	ENG

ENG: M. MEGLATHERY
DRAFTER: M. MEGLATHERY
SCALE: NTS
UPDATED: 12/19/11 14:58:06
STATUS: **AS-BUILT**

C Arch

SHEET TITLE:

CONTROL ROOM CONSOLE 60–71 ELEVATION

SHEET: 1 OF 1 | FILENAME: 0119-00 EL CONSOLE 60-71.dwg | REV LEVEL: 00

PROJECT NO. 106792

DRAWING NO. 0119

PLOT: Oct. 25, 2012 1:13 pm

Copyright © 2012 Diversified Systems

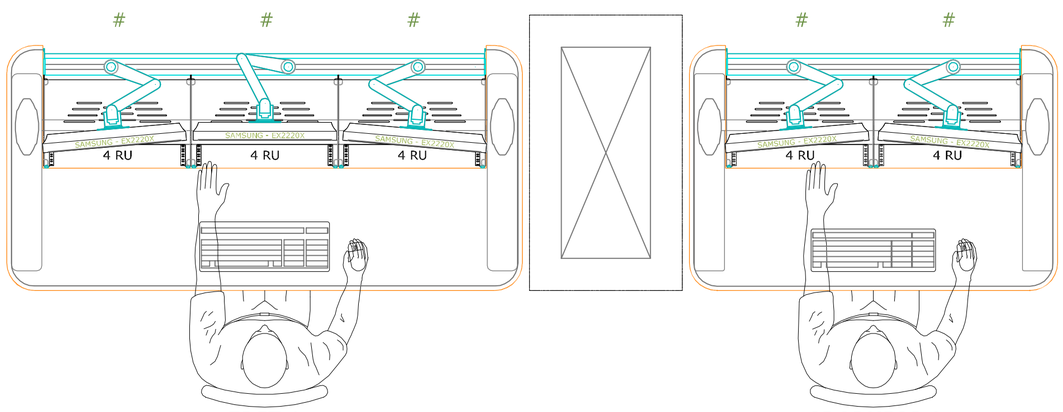

EDIT 1 **GRAPHICS 1**

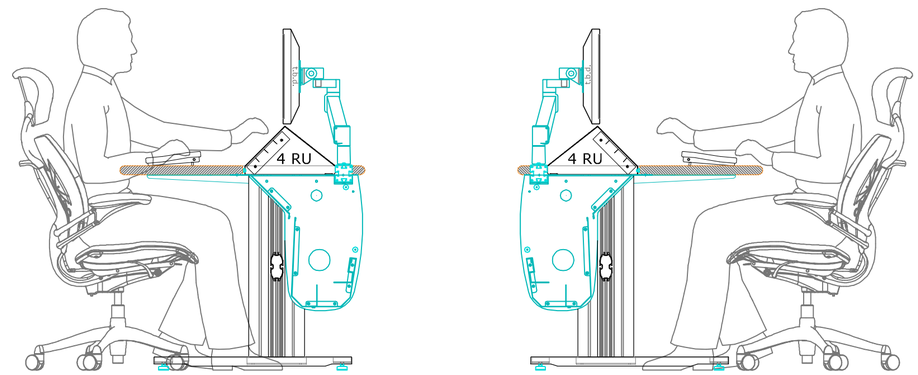

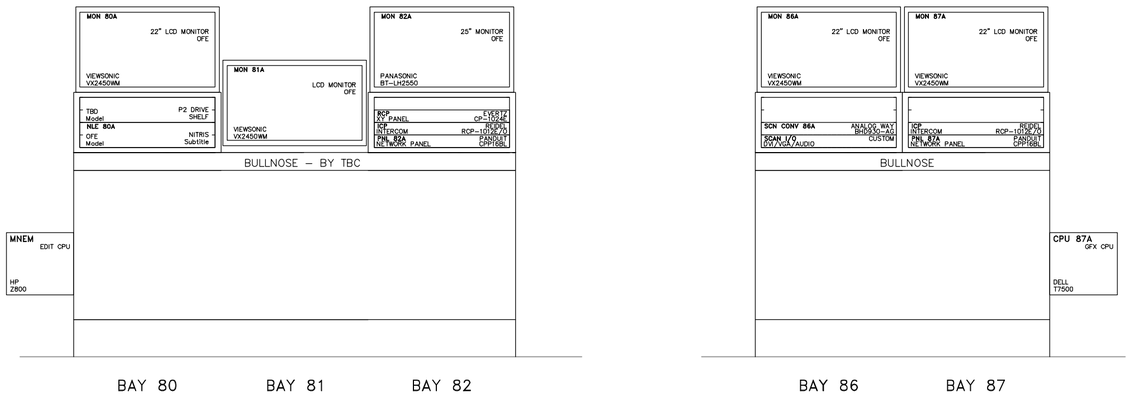

Copyright © 2012 Diversified Systems

DIVERSIFIED SYSTEMS

REV	DATE	DESCRIPTION	ENG

ENG: M. MEGLATHERY
DRAFTER: M. MEGLATHERY
SCALE: NTS
UPDATED: 01/16/12 15:27:30
STATUS: **AS-BUILT**

C Arch

SHEET TITLE:

CONTROL ROOM CONSOLE 80–87 ELEVATION

SHEET: 1 OF 1 | FILENAME: 0121-00 EL CONSOLE 80-87.dwg | REV LEVEL: 00

PROJECT NO. 106792

DRAWING NO. 0121

PLOT: Oct. 25, 2012 1:17 pm

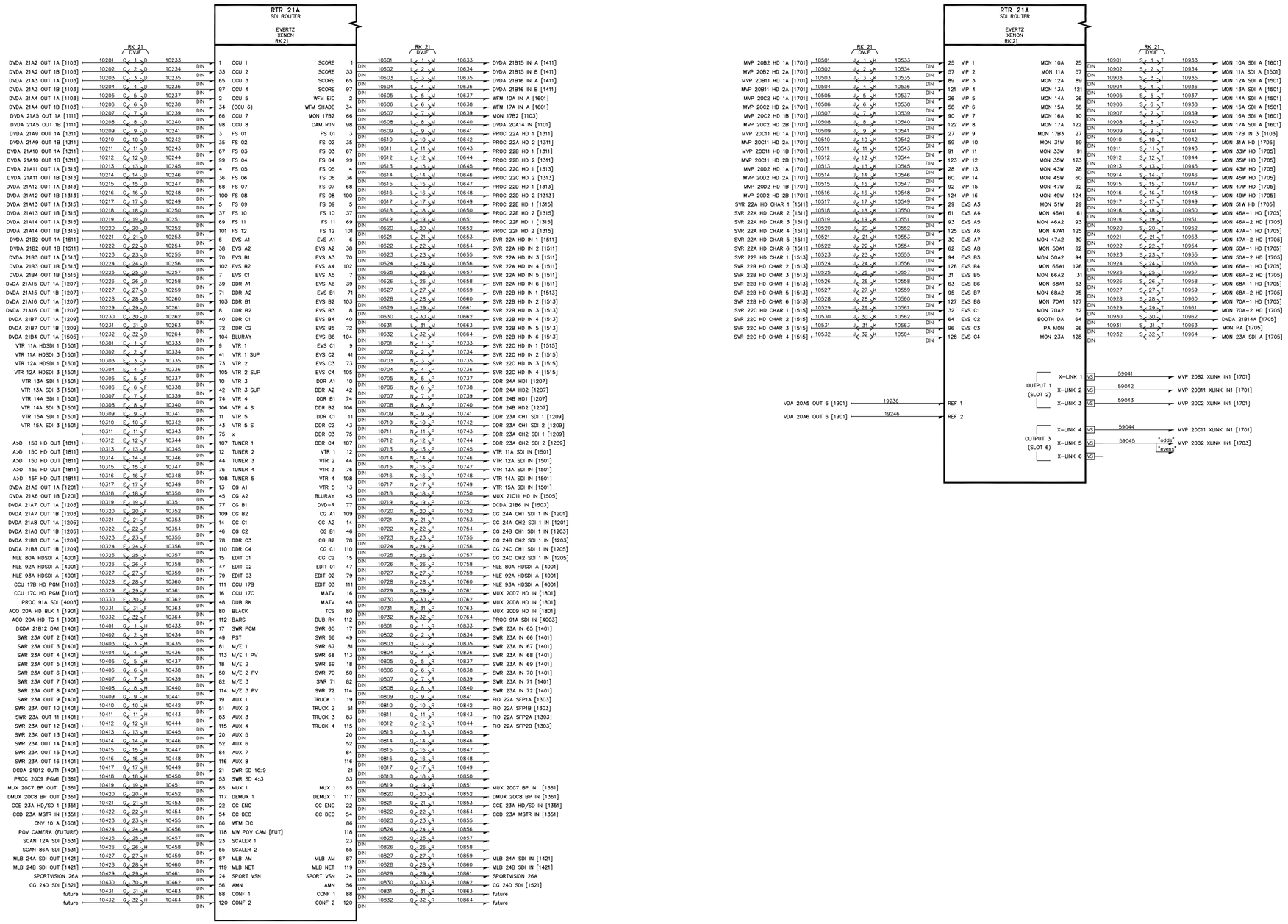

Copyright © 2012 Diversified Systems

DIVERSIFIED SYSTEMS

REV	DATE	DESCRIPTION	ENG
00	00/00/00	Initial Draft	F. LAST

ENG: S. MCFARLAND
DRAFTER: S. MCFARLAND
SCALE: NTS
UPDATED: 05/16/12 08:54:55
STATUS: **AS-BUILT**

C Arch

SHEET TITLE:

VIDEO ROUTER VIDEO WIRING DIAGRAM

SHEET: 1 OF 1 | FILENAME: 1001-00 VW VIDEO ROUTER.dwg | REV LEVEL: 00

PROJECT NO. 106792

DRAWING NO. 1001

PLOT: Oct. 25, 2012 1:17 pm

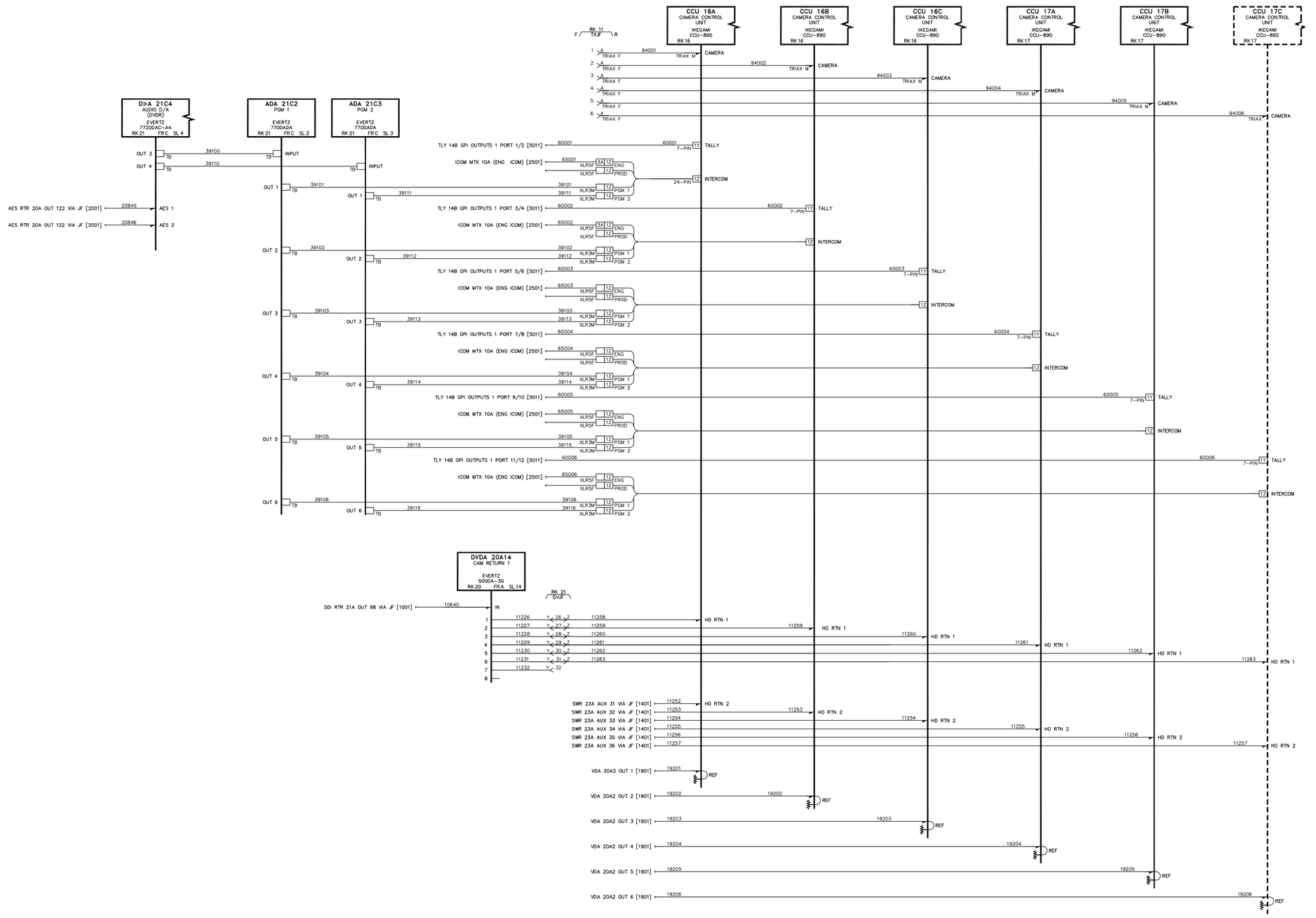

NOTES:

(01) ALL CCUs CONTINUED ON DWG 1103

Copyright © 2012 Diversified Systems

DIVERSIFIED SYSTEMS

REV	DATE	DESCRIPTION	ENG
00	00/00/00	Initial Draft	F. LAST

ENG: S. MCFARLAND
DRAFTER: S. MCFARLAND
SCALE: NTS
UPDATED: 01/16/12 12:24:12
STATUS: AS-BUILT

C Arch

SHEET TITLE:

CAMERA SYSTEM – INPUTS VIDEO WIRING DIAGRAM

SHEET: 1 OF 1 | FILENAME: 1101-00 VW CAMERA SYSTEM 1.dwg | REV LEVEL: 00

PROJECT NO. 106792

DRAWING NO. 1101

PLOT: Oct. 25, 2012 1:17 pm

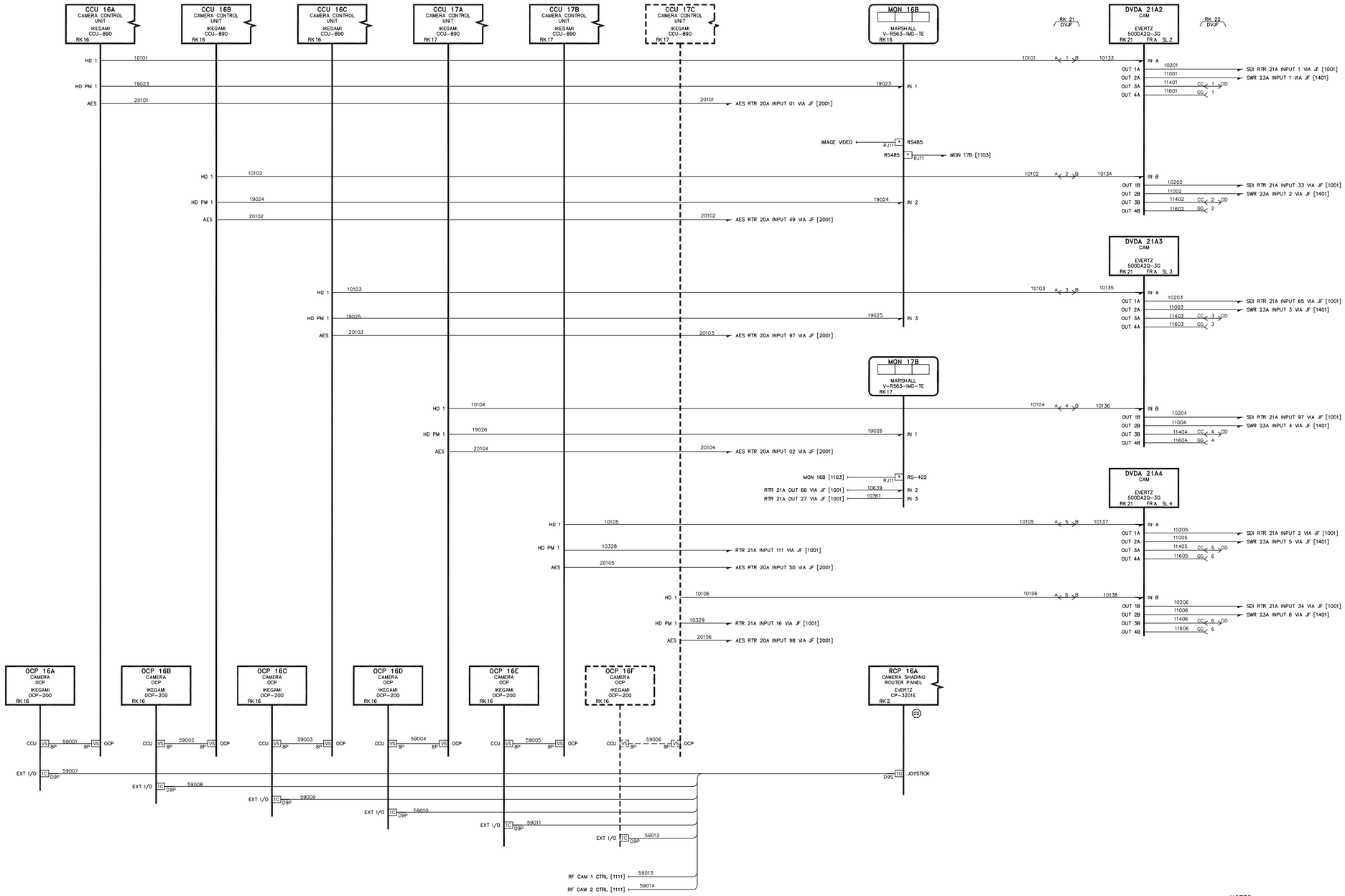

NOTES:

(01) CONTINUED ON DWG 1101

Copyright © 2012 Diversified Systems

DIVERSIFIED SYSTEMS

REV	DATE	DESCRIPTION	ENG
00	00/00/00	Initial Draft	F. LAST

ENG: S. MCFARLAND
DRAFTER: S. MCFARLAND
SCALE: NTS
UPDATED: 01/16/12 12:28:33
STATUS: AS-BUILT

C Arch

SHEET TITLE:

CAMERA SYSTEM – OUTPUTS VIDEO WIRING DIAGRAM

SHEET: 1 OF 1 | FILENAME: 1103-00 VW CAMERA SYSTEM 2.dwg | REV LEVEL: 00

PROJECT NO. 106792

DRAWING NO. 1103

PLOT: Oct. 25, 2012 1:17 pm

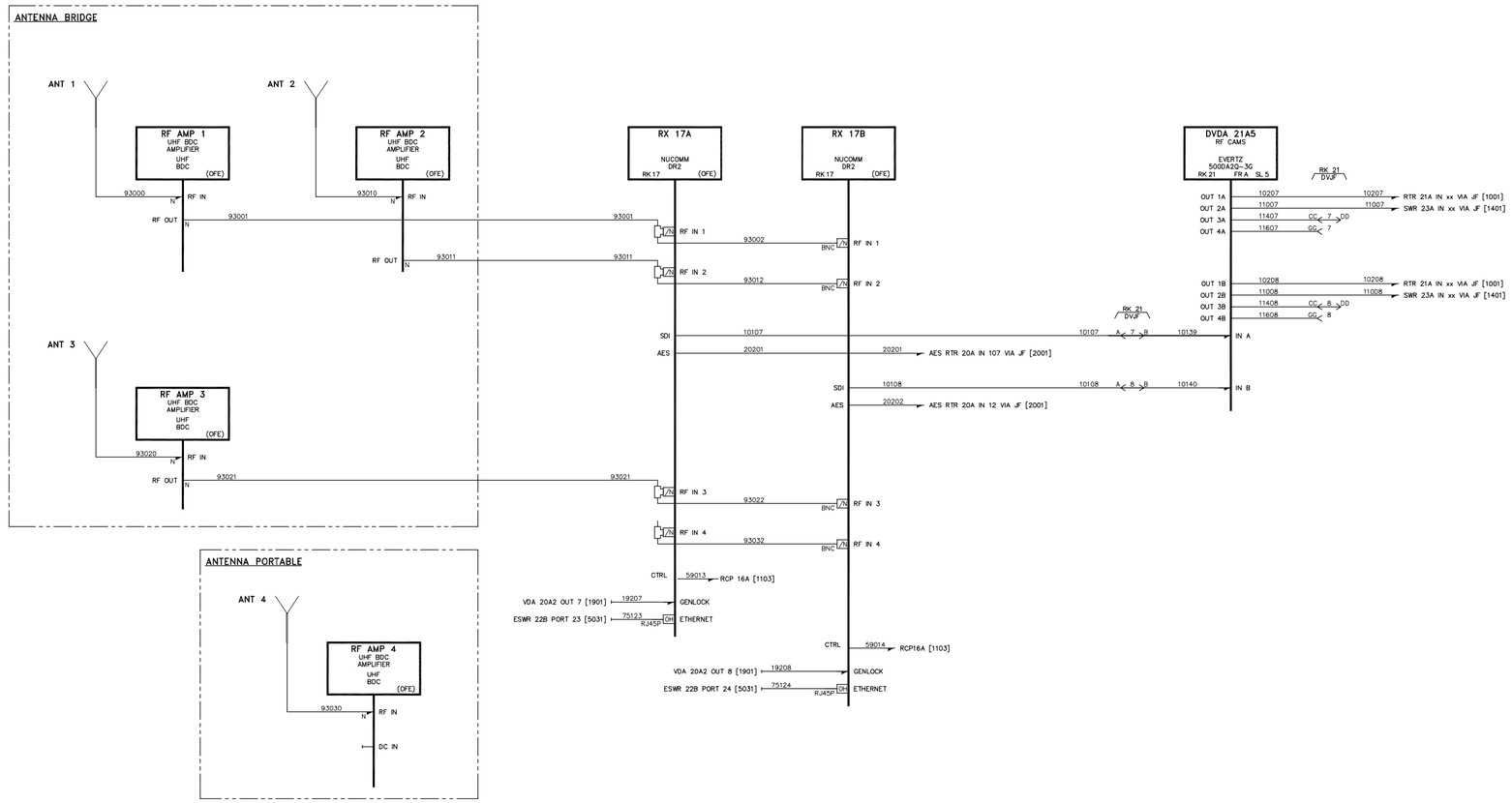

DIVERSIFIED SYSTEMS

REV	DATE	DESCRIPTION	ENG
00	00/00/00	Initial Draft	F. LAST

ENG: S. MCFARLAND
DRAFTER: S. MCFARLAND
SCALE: NTS
UPDATED: 01/25/12 10:16:16
STATUS: **AS-BUILT**

C Arch

SHEET TITLE:

RF CAMERA SYSTEM VIDEO WIRING DIAGRAM

SHEET: 1 OF 1 | FILENAME: 1111-00 VW CAMERA SYSTEM WIRELESS.dwg | REV LEVEL: 00

PROJECT NO. 106792

DRAWING NO. 1111

PLOT: Oct. 25, 2012 1:18 pm

Copyright © 2012 Diversified Systems

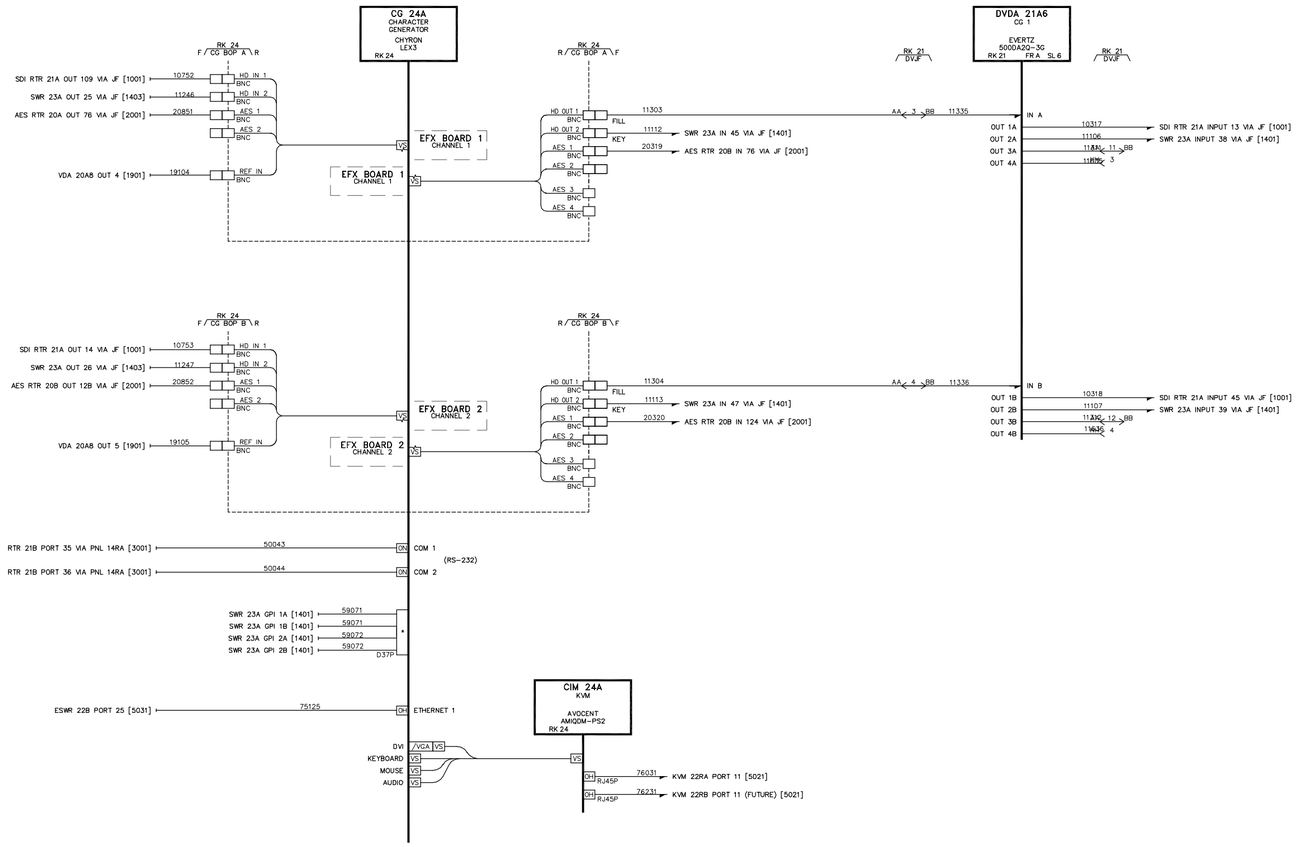

DIVERSIFIED SYSTEMS

REV	DATE	DESCRIPTION	ENG
00	00/00/00	Initial Draft	F. LAST

ENG: S. MCFARLAND
DRAFTER: S. MCFARLAND
SCALE: NTS
UPDATED: 01/16/12 16:36:40
STATUS: **AS-BUILT**

C Arch

SHEET TITLE:

GRAPHICS SYSTEM 1 VIDEO WIRING DIAGRAM

SHEET: 1 OF 1
FILENAME: 1201-00 VW GRAPHICS CG1.dwg
REV LEVEL: 00

PROJECT NO. 106792
DRAWING NO. 1201

PLOT: Oct. 25, 2012 1:19 pm

Copyright © 2012 Diversified Systems

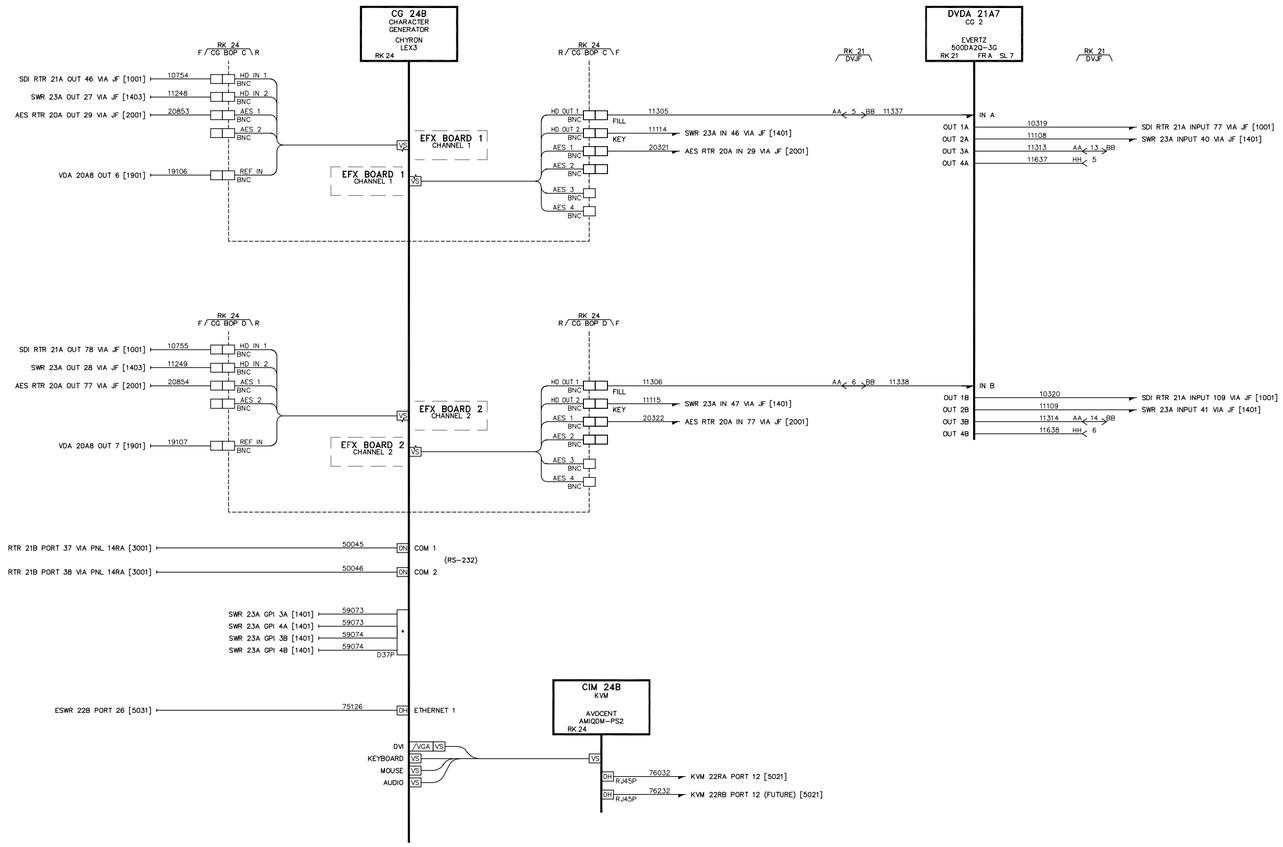

DIVERSIFIED SYSTEMS

REV	DATE	DESCRIPTION	ENG
00	00/00/00	Initial Draft	F. LAST

ENG: S. MCFARLAND
DRAFTER: S. MCFARLAND
SCALE: NTS
UPDATED: 01/16/12 15:39:59
STATUS: **AS-BUILT**

C Arch

SHEET TITLE:

GRAPHICS SYSTEM 2 VIDEO WIRING DIAGRAM

SHEET: 1 OF 1 | FILENAME: 1203-00 VW GRAPHICS CG2.dwg | REV LEVEL: 00

PROJECT NO. 106792

DRAWING NO. 1203

PLOT: Oct. 25, 2012 1:18 pm

Copyright © 2012 Diversified Systems

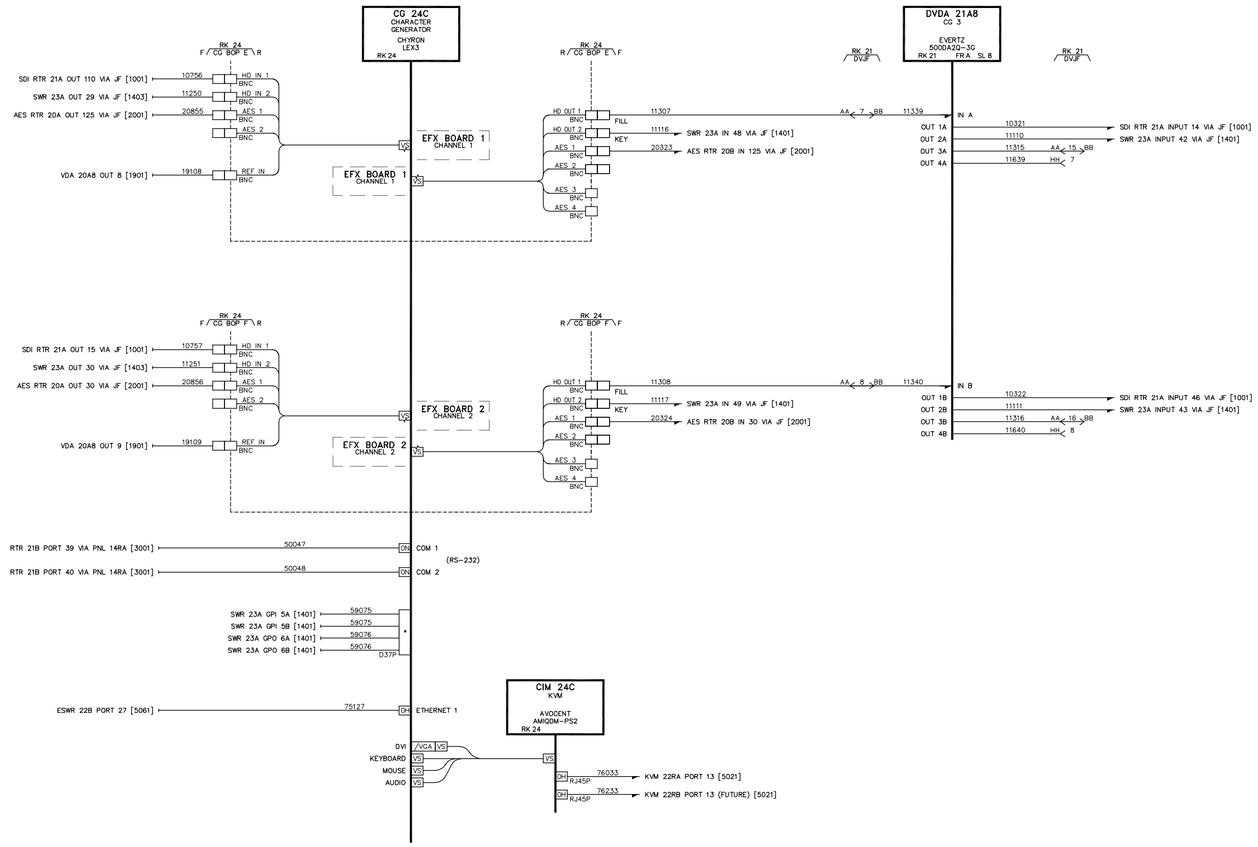

DIVERSIFIED SYSTEMS

REV	DATE	DESCRIPTION	ENG
00	00/00/00	Initial Draft	F. LAST

ENG: S. MCFARLAND
DRAFTER: S. MCFARLAND
SCALE: NTS
UPDATED: 01/16/12 15:41:05
STATUS: **AS-BUILT**

C Arch

SHEET TITLE:

GRAPHICS SYSTEM 3 VIDEO WIRING DIAGRAM

SHEET: 1 OF 1 | FILENAME: 1205-00 VW GRAPHICS CG3.dwg | REV LEVEL: 00

PROJECT NO. 106792

DRAWING NO. 1205

Copyright © 2012 Diversified Systems

PLOT: Oct. 25, 2012 1:18 pm

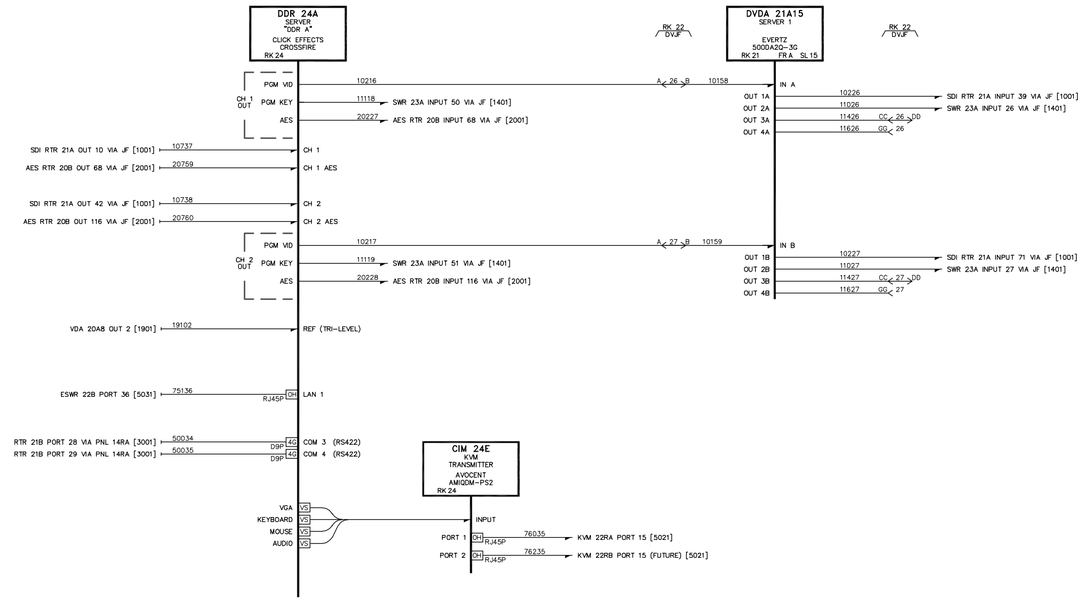

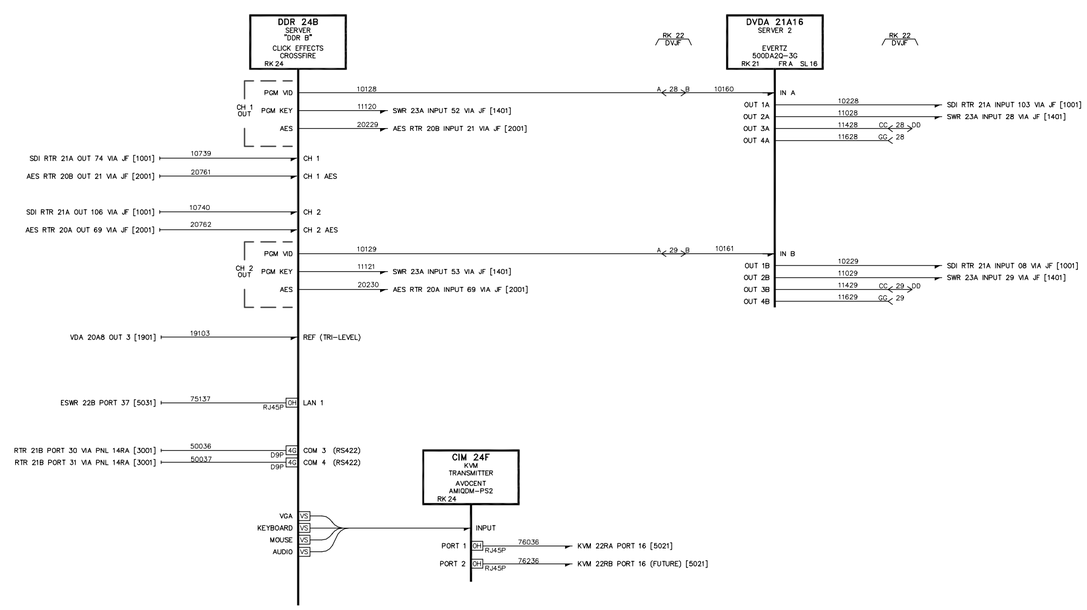

DIVERSIFIED SYSTEMS

REV	DATE	DESCRIPTION	ENG
00	00/00/00	Initial Draft	F. LAST

ENG: S. MCFARLAND
DRAFTER: S. MCFARLAND
SCALE: NTS
UPDATED: 10/02/12 13:13:20
STATUS: **AS-BUILT**

C Arch

SHEET TITLE:

CLICK EFFECTS SERVERS VIDEO WIRING DIAGRAM

SHEET: 1 OF 1 | FILENAME: 1207-00 VW CLIP SERVER 1.dwg | REV LEVEL: 00

PROJECT NO. 106792

DRAWING NO. 1207

PLOT: Oct. 25, 2012 1:18 pm

Copyright © 2012 Diversified Systems

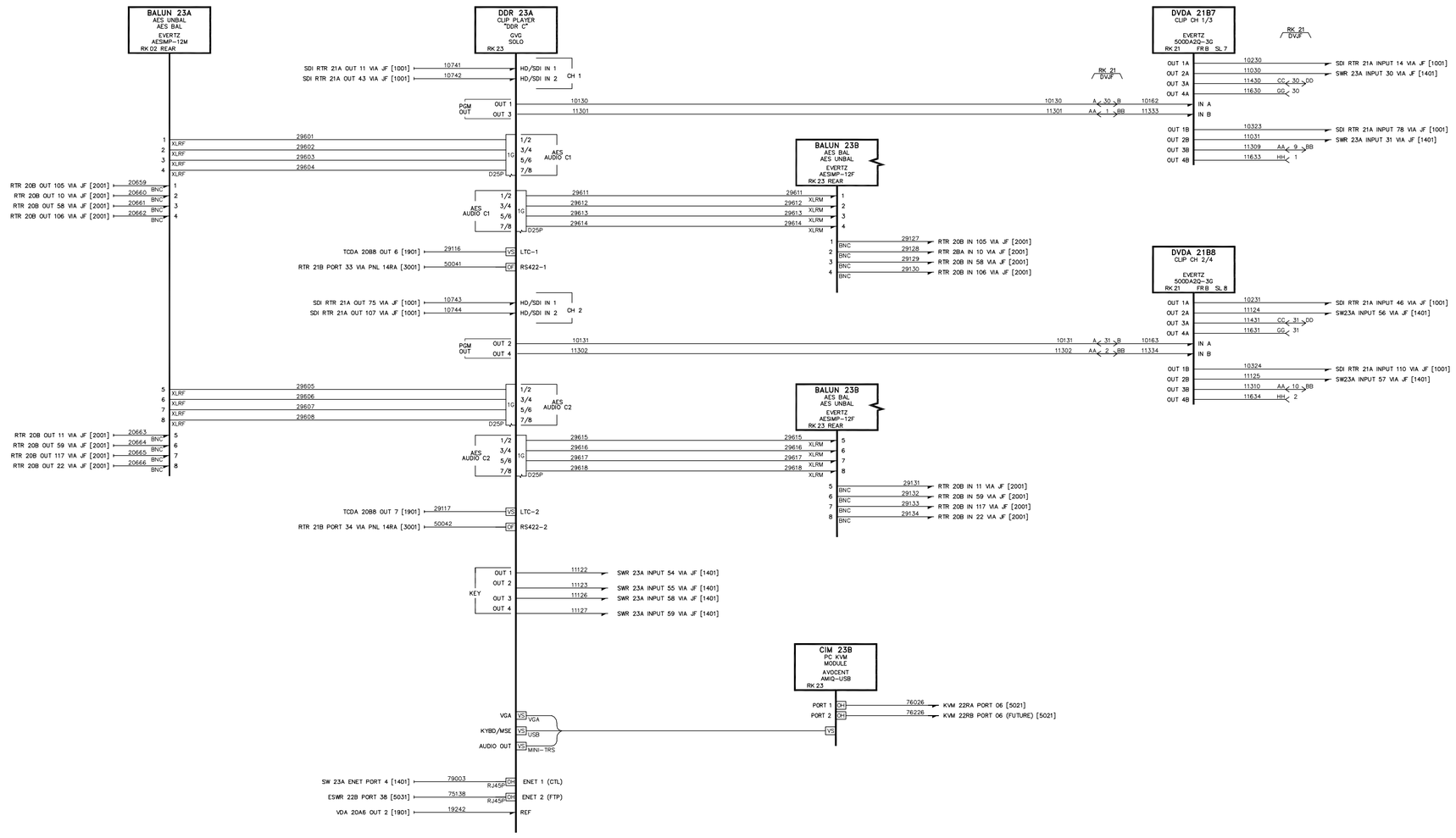

NOTES:

(01) CONTINUED DRAWING 1303, 1305, 1307

Copyright © 2012 Diversified Systems

DIVERSIFIED SYSTEMS

REV	DATE	DESCRIPTION	ENG
00	00/00/00	Initial Draft	F. LAST

ENG: M. MEGLATHERY
DRAFTER: M. MEGLATHERY
SCALE: NTS
UPDATED: 10/02/12 13:14:12
STATUS: **AS-BUILT**

C Arch

SHEET TITLE:

CLIP SERVER VIDEO WIRING DIAGRAM

SHEET: 1 OF 1 | FILENAME: 1209-00 VW CLIP SERVER 2.dwg | REV LEVEL: 00

PROJECT NO. 106792

DRAWING NO. 1209

PLOT: Oct. 25, 2012 1:18 pm

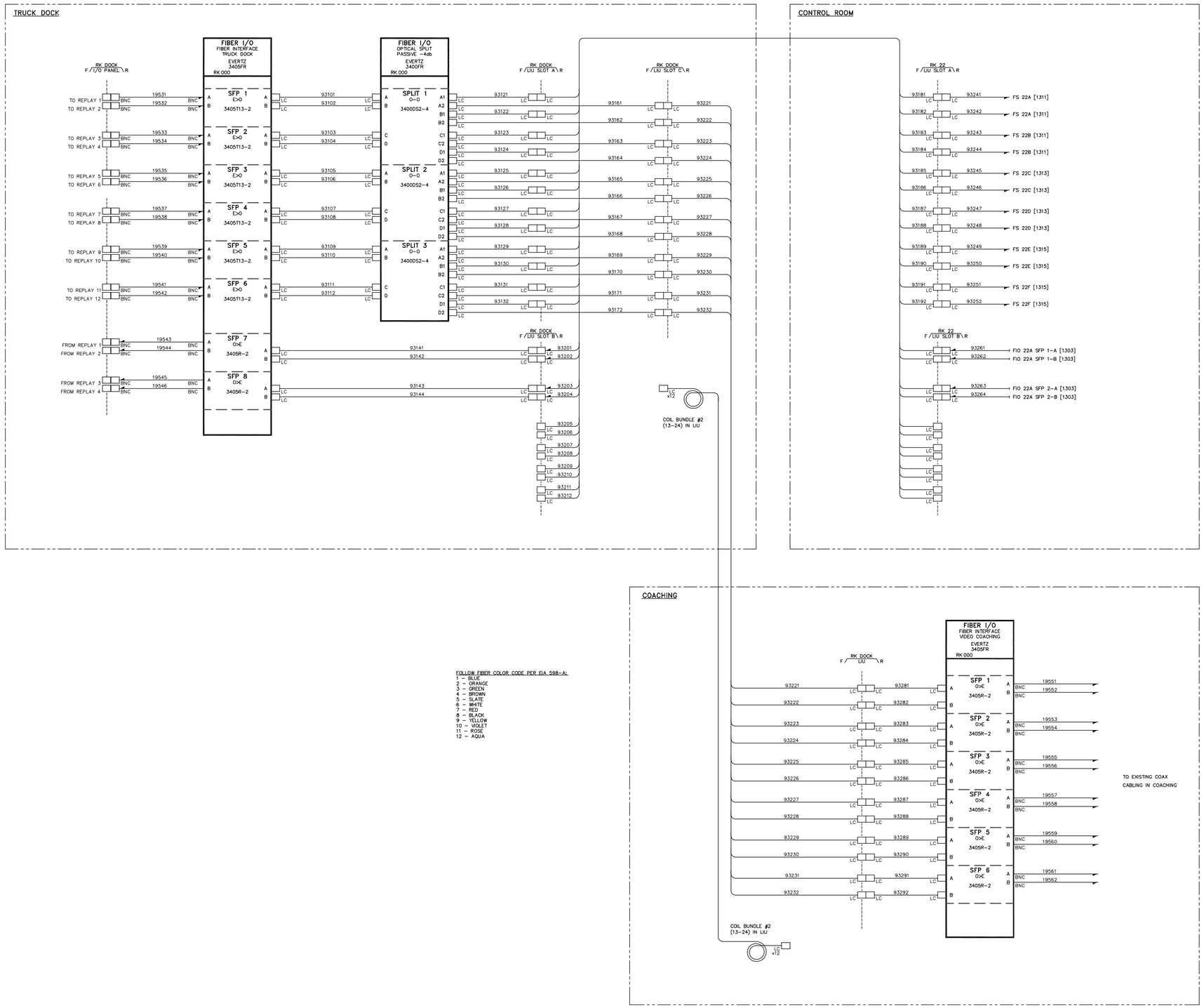

FOLLOW FIBER COLOR CODE PER EIA 598-A:
1 – BLUE
2 – ORANGE
3 – GREEN
4 – BROWN
5 – SLATE
6 – WHITE
7 – RED
8 – BLACK
9 – YELLOW
10 – VIOLET
11 – ROSE
12 – AQUA

DIVERSIFIED SYSTEMS

REV	DATE	DESCRIPTION	ENG
00	00/00/00	Initial Draft	F. LAST

ENG: S. MCFARLAND
DRAFTER: S. MCFARLAND
SCALE: NTS
UPDATED: 00/00/00 00:00:00
STATUS: **AS-BUILT**

C Arch

SHEET TITLE:

TRUCK DOCK – COACHING FIBER VIDEO WIRING DIAGRAM

SHEET: 1 OF 1 | FILENAME: 1301-00 VW TRUCK DOCK.dwg | REV LEVEL: 00

PROJECT NO. 106792

DRAWING NO. 1301

PLOT: Oct. 25, 2012 1:19 pm

Copyright © 2012 Diversified Systems

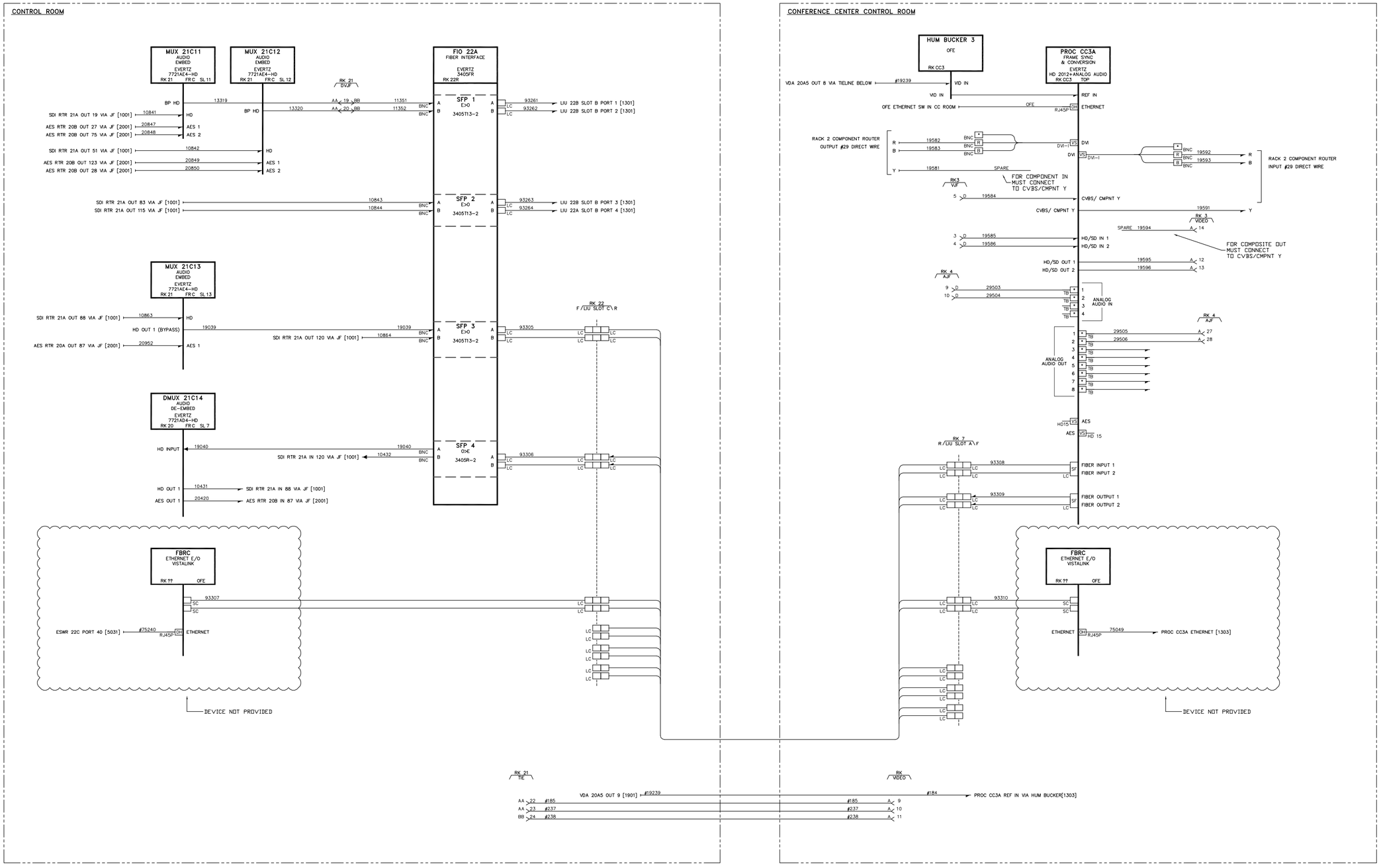

DIVERSIFIED SYSTEMS

REV	DATE	DESCRIPTION	ENG
02	09/21/12	AS INSTALLED ON SITE	K.JOHNSON
01	06/16/12	COMPLETE CONFERENCE CENTER	MCFARLAND
00	01/16/12	Initial Draft	MCFARLAND

ENG: S. MCFARLAND
DRAFTER: S. MCFARLAND
SCALE: NTS
UPDATED: 10/24/12 09:31:07
STATUS: **AS-BUILT**

C Arch

SHEET TITLE:

FIBER INTERFACE – TRUCK/CONFERENCE VIDEO WIRING DIAGRAM

SHEET: 1 OF 1 | FILENAME: 1303-01 VW FIBER INTERFACE.dwg | REV LEVEL: 01

PROJECT NO. 106792

DRAWING NO. 1303

PLOT: Oct. 25, 2012 1:21 pm

Copyright © 2012 Diversified Systems

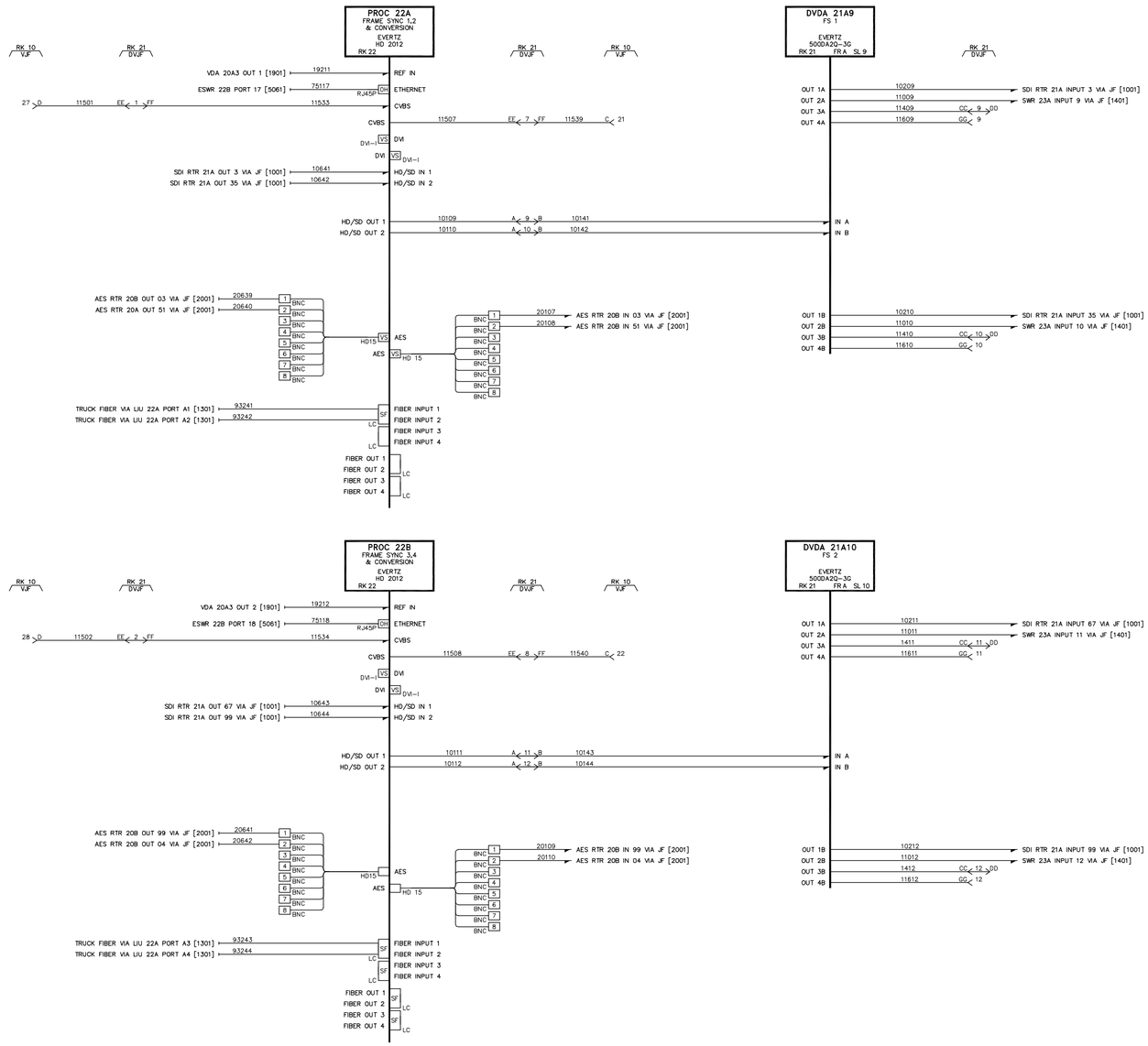

NOTES:

(01) CONTINUED DRAWING 1313, 1315

DIVERSIFIED SYSTEMS

REV	DATE	DESCRIPTION	ENG
00	00/00/00	Initial Draft	F. LAST

ENG: S. MCFARLAND
DRAFTER: S. MCFARLAND
SCALE: NTS
UPDATED: 01/16/12 13:59:55
STATUS: **AS-BUILT**

C Arch

SHEET TITLE:

FRAME SYNCS 1–4 VIDEO WIRING DIAGRAM

SHEET: 1 OF 1 | FILENAME: 1311-00 VW TRUCK RX 1.dwg | REV LEVEL: 00

PROJECT NO. 106792

DRAWING NO. 1311

PLOT: Oct. 25, 2012 1:20 pm

Copyright © 2012 Diversified Systems

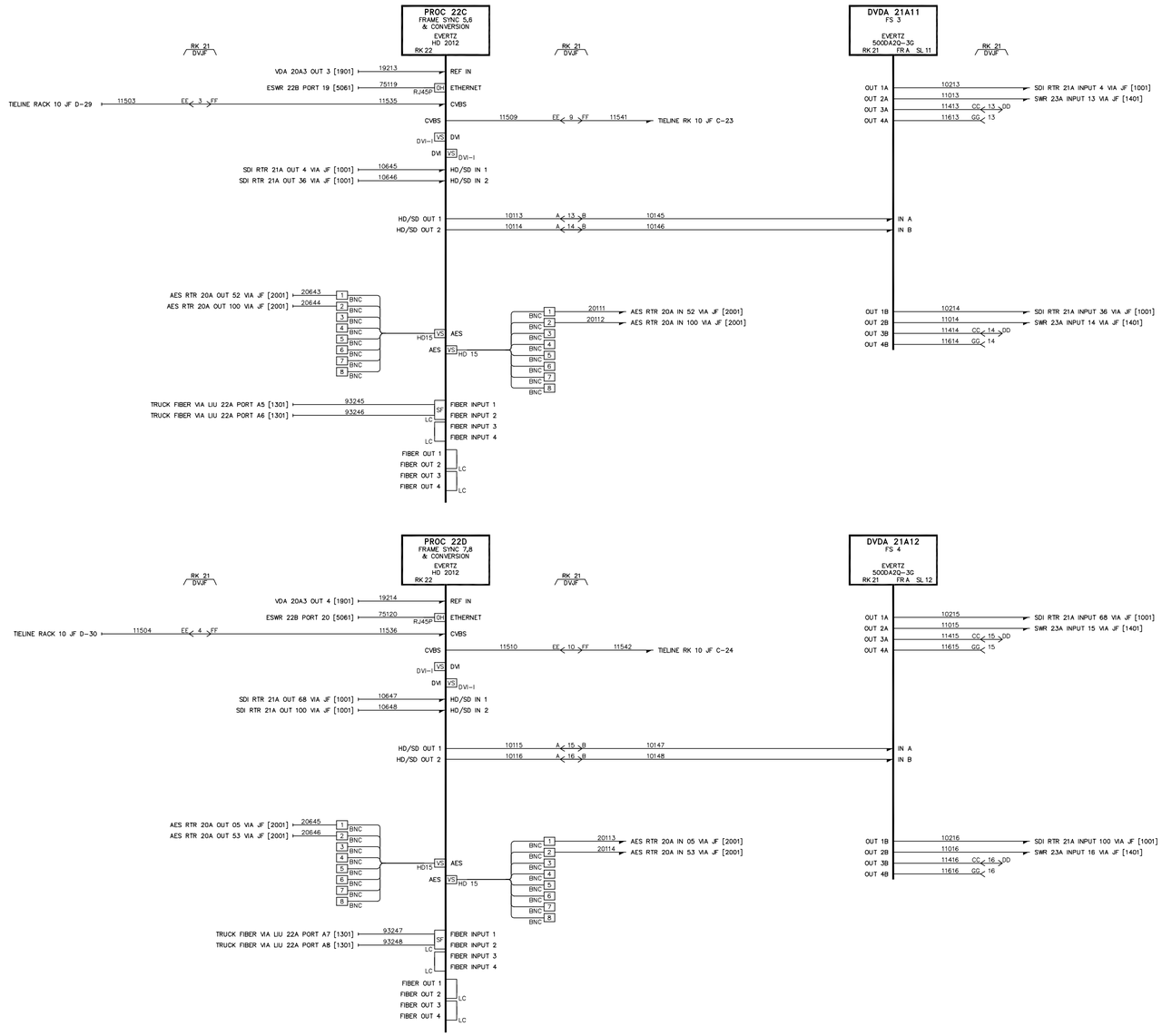

NOTES:

(01) CONTINUED DRAWING 1311, 1315

DIVERSIFIED SYSTEMS

REV	DATE	DESCRIPTION	ENG
00	00/00/00	Initial Draft	F. LAST

ENG: S. MCFARLAND
DRAFTER: S. MCFARLAND
SCALE: NTS
UPDATED: 01/16/12 14:00:47
STATUS: **AS-BUILT**

C Arch

SHEET TITLE:

FRAME SYNCS 5–8 VIDEO WIRING DIAGRAM

SHEET: 1 OF 1 | FILENAME: 1313-00 VW TRUCK RX 2.dwg | REV LEVEL: 00

PROJECT NO. 106792

DRAWING NO. 1313

Copyright © 2012 Diversified Systems

PLOT: Oct. 25, 2012 1:21 pm

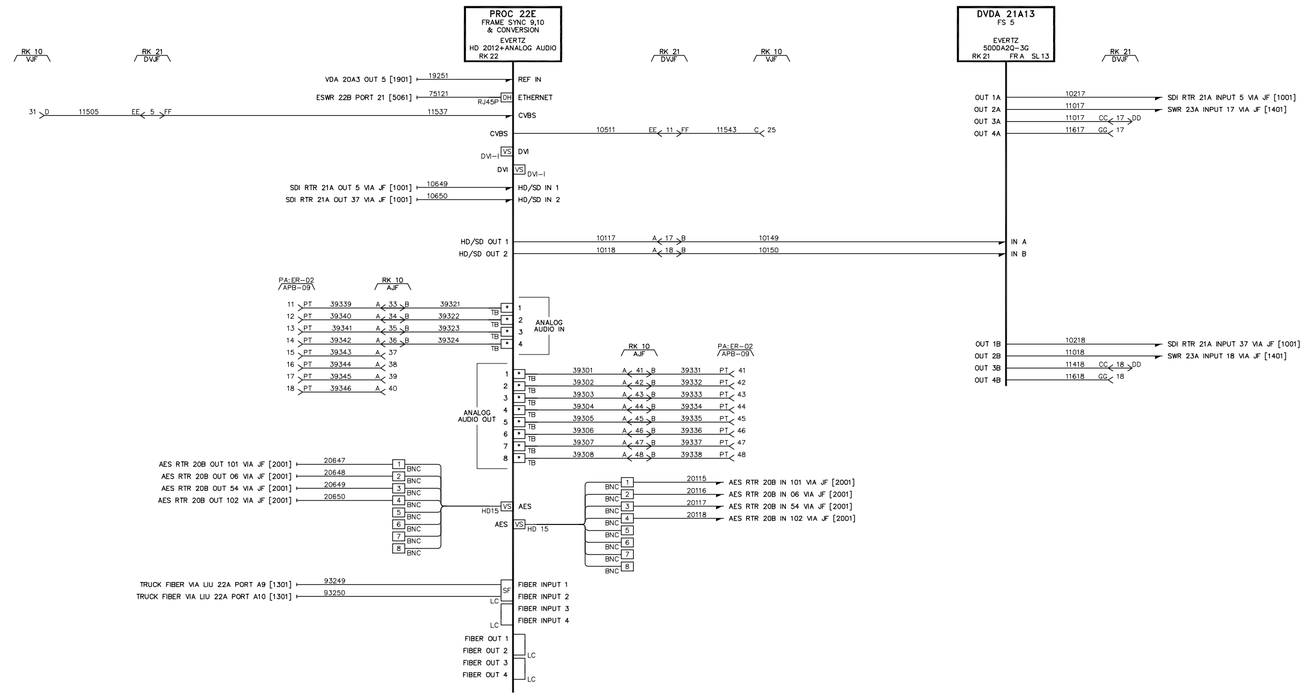

NOTES:

(01) CONTINUED DRAWING 1311, 1313

DIVERSIFIED SYSTEMS

REV	DATE	DESCRIPTION	ENG
00	00/00/00	Initial Draft	F. LAST

ENG: S. MCFARLAND
DRAFTER: S. MCFARLAND
SCALE: NTS
UPDATED: 10/02/12 13:21:55
STATUS: AS-BUILT

C Arch

SHEET TITLE:

FRAME SYNCS 9–12 VIDEO WIRING DIAGRAM

SHEET: 1 OF 1 | FILENAME: 1315-00 VW TRUCK RX 3.dwg | REV LEVEL: 00

PROJECT NO. 106792

DRAWING NO. 1315

PLOT: Oct. 25, 2012 1:22 pm

Copyright © 2012 Diversified Systems

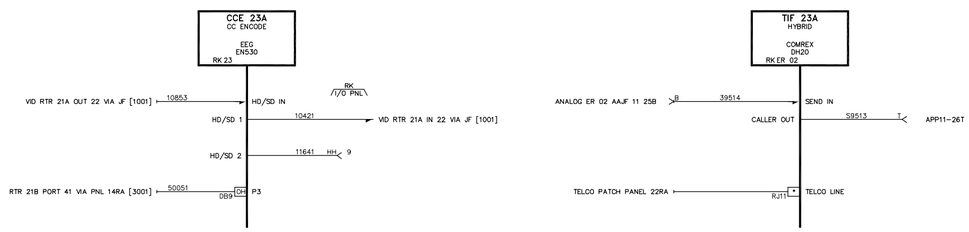

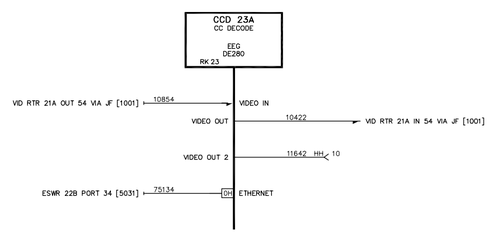

Copyright © 2012 Diversified Systems

DIVERSIFIED SYSTEMS

REV	DATE	DESCRIPTION	ENG
00	00/00/00	Initial Draft	F. LAST

ENG: S. MCFARLAND
DRAFTER: S. MCFARLAND
SCALE: NTS
UPDATED: 05/16/12 09:00:13
STATUS: **AS-BUILT**

C Arch

SHEET TITLE:

CLOSED CAPTIONING SYSTEM VIDEO WIRING DIAGRAM

SHEET: 1 OF 1 | FILENAME: 1351-00 VW CLOSED CAPTION.dwg | REV LEVEL: 00

PROJECT NO. 106792

DRAWING NO. 1351

PLOT: Oct. 25, 2012 1:22 pm

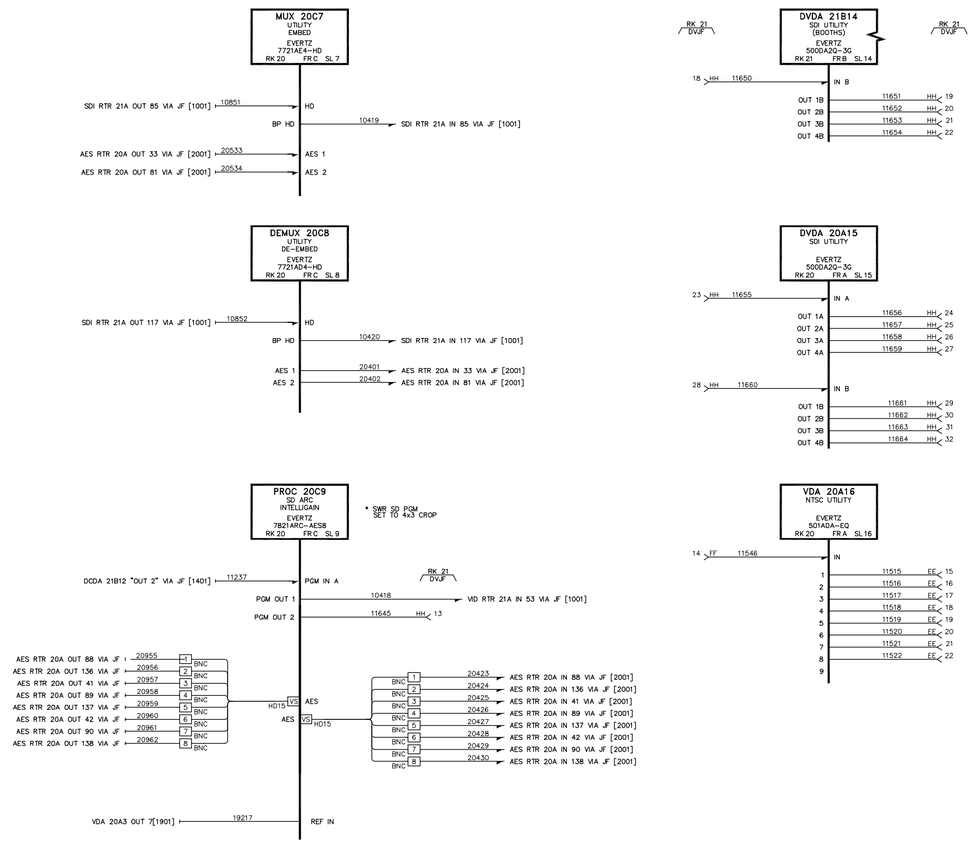

DIVERSIFIED
S Y S T E M S

REV	DATE	DESCRIPTION	ENG
00	00/00/00	Initial Draft	F. LAST

ENG: S. MCFARLAND
DRAFTER: S. MCFARLAND
SCALE: NTS
UPDATED: 01/16/12 14:07:12
STATUS: **AS-BUILT**

C
Arch

SHEET TITLE:

UTILITY MUX – DA
VIDEO WIRING DIAGRAM

SHEET: 1 OF 1 | FILENAME: 1361-00 VW UTILITY MUX-DA.dwg | REV LEVEL: 00

PROJECT NO. 106792
DRAWING NO. 1361

Copyright © 2012 Diversified Systems

PLOT: Oct. 25, 2012 1:21 pm

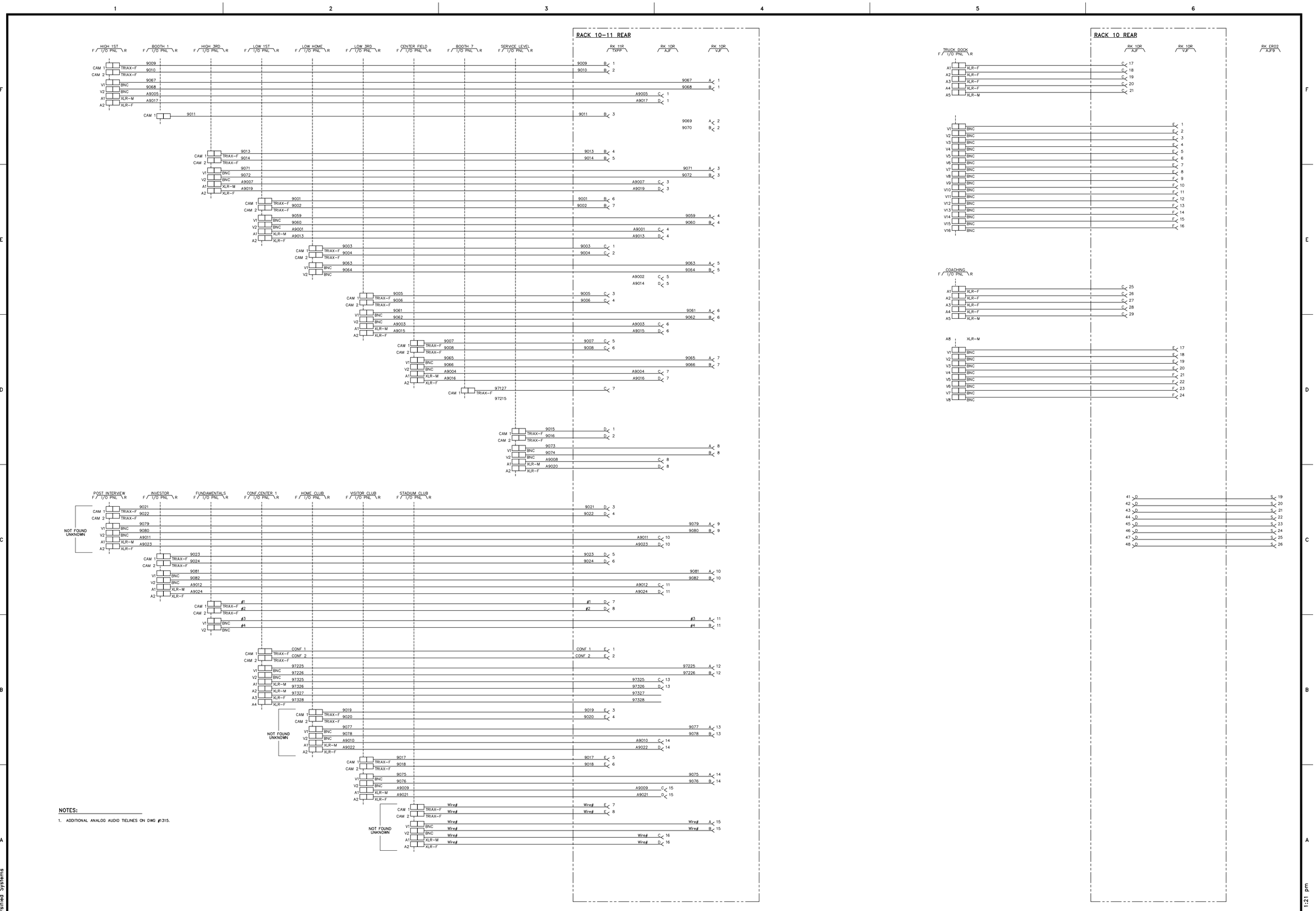

Copyright © 2012 Diversified Systems

DIVERSIFIED SYSTEMS

REV	DATE	DESCRIPTION	ENG
00	00/00/00	Initial Draft	F. LAST

ENG: S. MCFARLAND
DRAFTER: S. MCFARLAND
SCALE: NTS
UPDATED: 03/21/12 07:26:23
STATUS: DRAFT

C Arch

SHEET TITLE:

FACILITY TIELINES VIDEO WIRING DIAGRAM

SHEET: 1 OF 1
FILENAME: 1391-00 VW FACILITY TIELINES.dwg
REV LEVEL: 00

PROJECT NO. 106792
DRAWING NO. 1391

PLOT: Oct. 25, 2012 1:21 pm

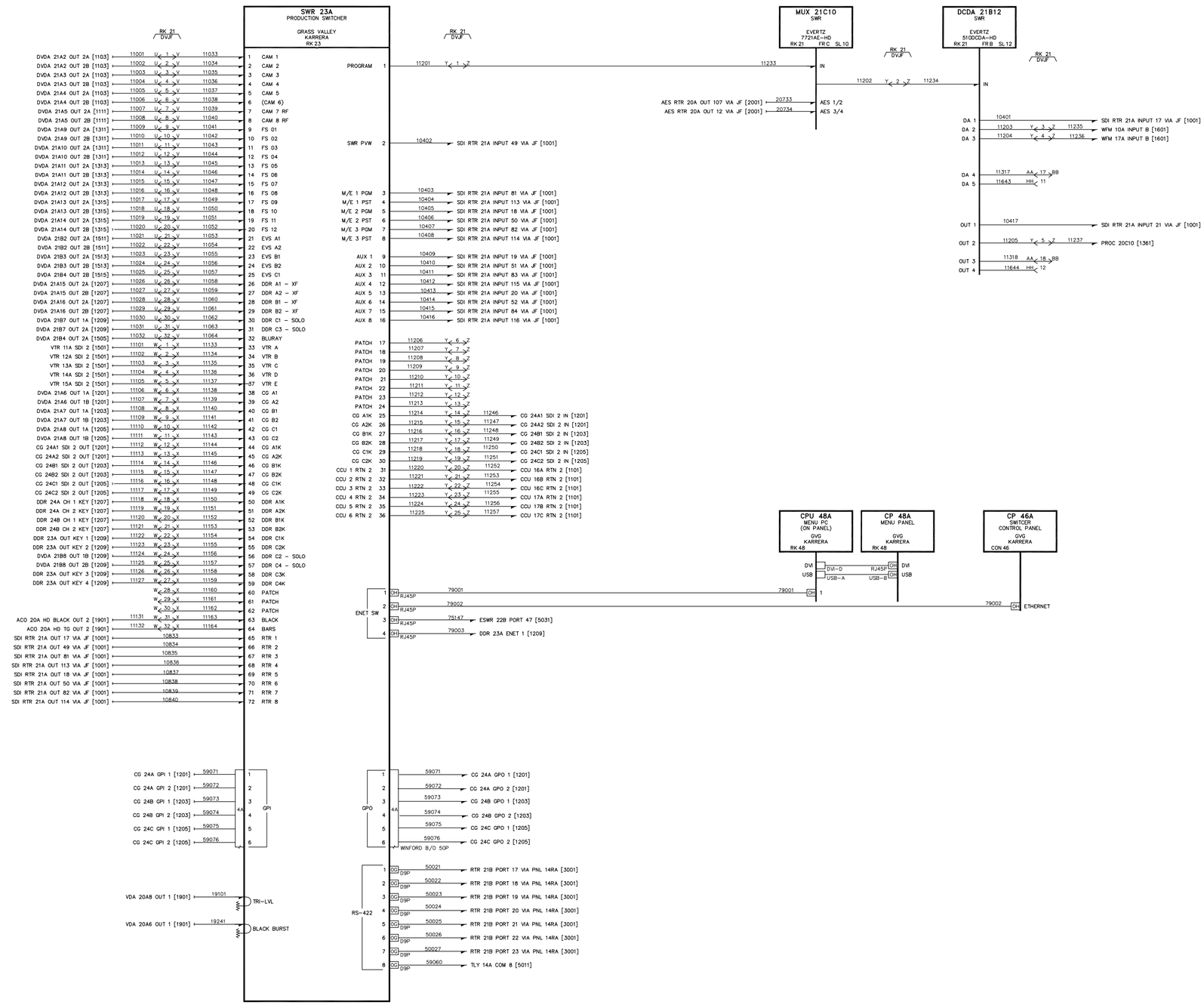

DIVERSIFIED SYSTEMS

REV	DATE	DESCRIPTION	ENG
00	00/00/00	Initial Draft	F. LAST

ENG: S. MCFARLAND
DRAFTER: S. MCFARLAND
SCALE: NTS
UPDATED: 05/16/12 08:08:17
STATUS: **AS-BUILT**

C Arch

SHEET TITLE:

VIDEO SWITCHER
VIDEO WIRING DIAGRAM

SHEET: 1 OF 1 | FILENAME: 1401-00 VW SWITCHER.dwg | REV LEVEL: 00

PROJECT NO. 106792

DRAWING NO. 1401

PLOT: Oct. 25, 2012 1:22 pm

Copyright © 2012 Diversified Systems

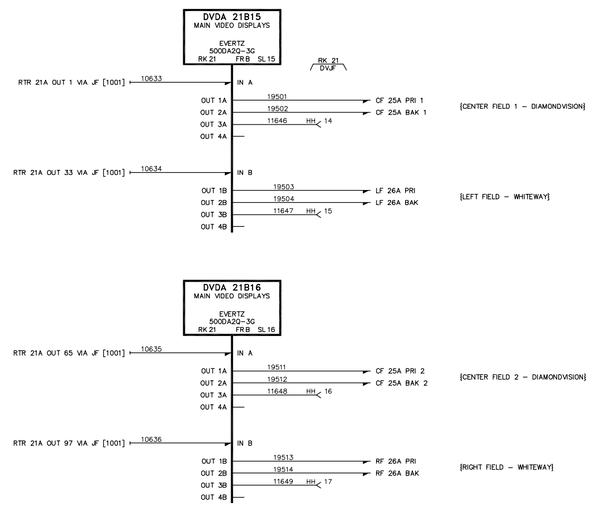

Copyright © 2012 Diversified Systems

DIVERSIFIED SYSTEMS

REV	DATE	DESCRIPTION	ENG
00	00/00/00	Initial Draft	F. LAST

ENG: S. MCFARLAND
DRAFTER: S. MCFARLAND
SCALE: NTS
UPDATED: 01/16/12 14:12:35
STATUS: **AS-BUILT**

C Arch

SHEET TITLE:

STADIUM DISPLAY DISTRIBUTION VIDEO WIRING DIAGRAM

SHEET: 1 OF 1 | FILENAME: 1411-00 VW STADIUM DISPLAY FEED.dwg | REV LEVEL: 00

PROJECT NO. 106792

DRAWING NO. 1411

PLOT: Oct. 25, 2012 1:22 pm

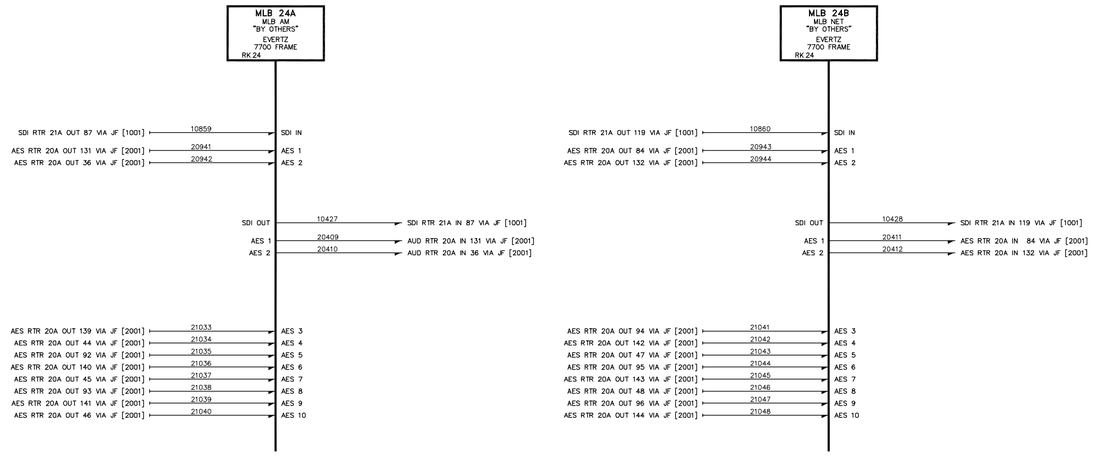

NOTES:

1. ALL MLB INTERFACE TO EVERTZ 7700 FRAMES BY OTHERS.
2. ALL CABLING TO BE TERMINATED AND COILED TO RACK 24 FOR MLB.

Copyright © 2012 Diversified Systems

DIVERSIFIED SYSTEMS

REV	DATE	DESCRIPTION	ENG
00	00/00/00	Initial Draft	F. LAST

ENG: S. MCFARLAND
DRAFTER: S. MCFARLAND
SCALE: NTS
UPDATED: 01/16/12 14:27:41
STATUS: AS-BUILT

C Arch

SHEET TITLE:

MLB MEDIA SYSTEM INTERFACE VIDEO WIRING DIAGRAM

SHEET: 1 OF 1
FILENAME: 1421-00 VW MLB STUFF.dwg
REV LEVEL: 00

PROJECT NO. 106792
DRAWING NO. 1421

PLOT: Oct. 25, 2012 1:22 pm

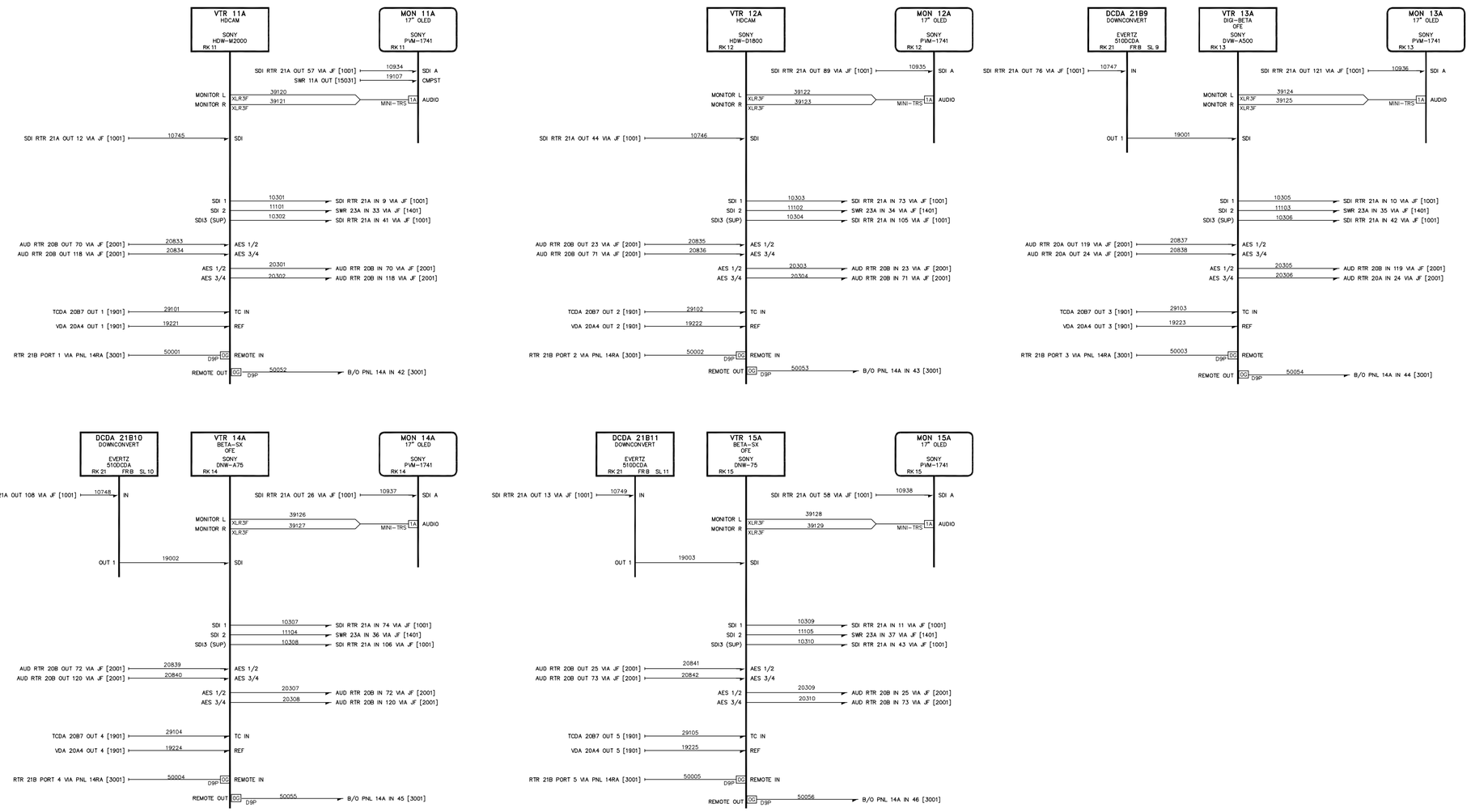

DIVERSIFIED SYSTEMS

REV	DATE	DESCRIPTION	ENG
00	00/00/00	Initial Draft	F. LAST

ENG: S. MCFARLAND
DRAFTER: S. MCFARLAND
SCALE: NTS
UPDATED: 10/02/12 13:23:44
STATUS: **AS-BUILT**

C Arch

SHEET TITLE:

VTR VIDEO WIRING DIAGRAM

SHEET: 1 OF 1 | FILENAME: 1501-00 VW PLAY-RECORD VTR.dwg | REV LEVEL: 00

PROJECT NO. 106792

DRAWING NO. 1501

PLOT: Oct. 25, 2012 1:23 pm

Copyright © 2012 Diversified Systems

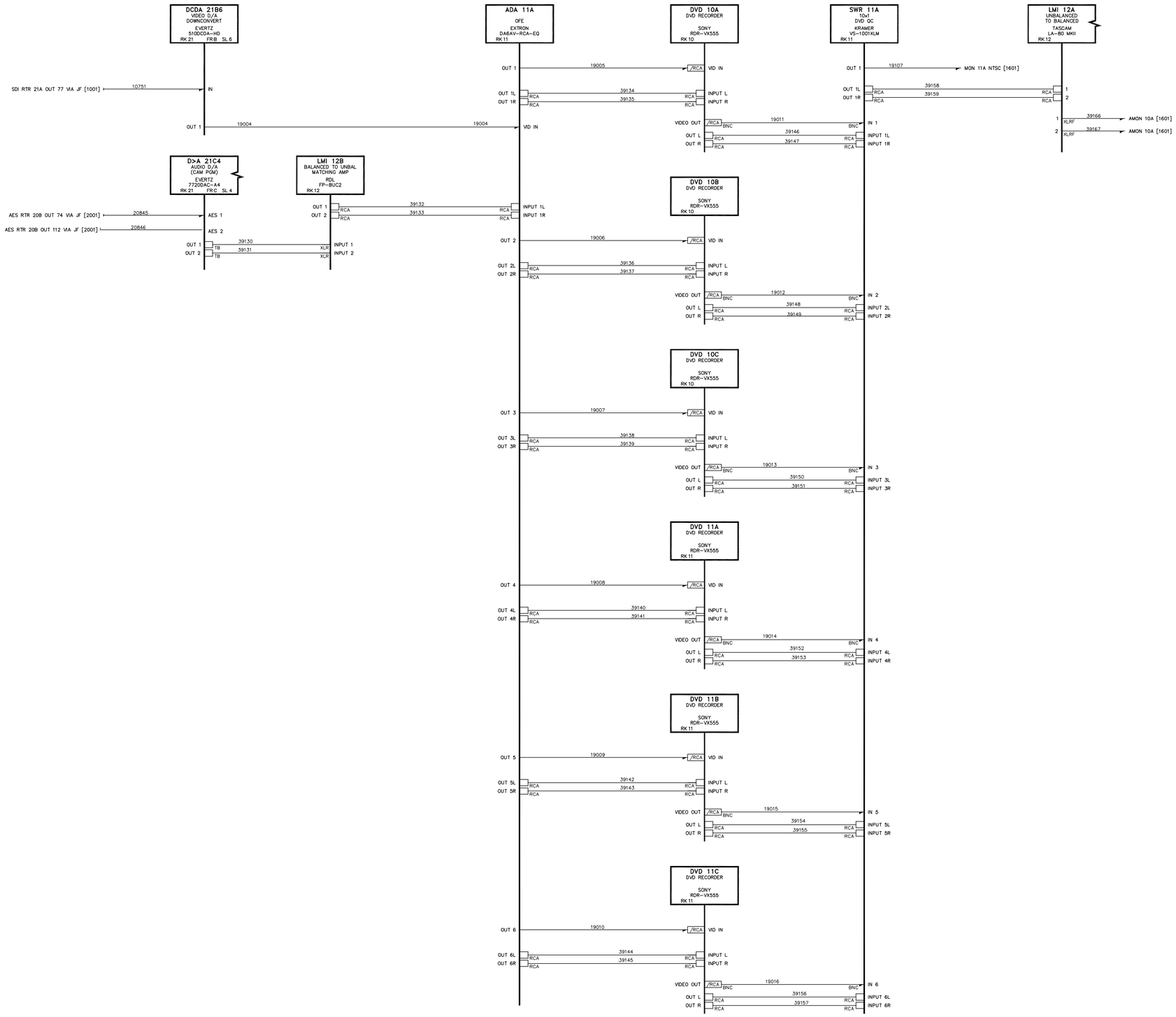

Copyright © 2012 Diversified Systems

DIVERSIFIED SYSTEMS

REV	DATE	DESCRIPTION	ENG
00	00/00/00	Initial Draft	F. LAST

ENG: S. MCFARLAND
DRAFTER: S. MCFARLAND
SCALE: NTS
UPDATED: 01/16/12 14:16:36
STATUS: **AS-BUILT**

C Arch

SHEET TITLE:

DVD RECORDING VIDEO WIRING DIAGRAM

SHEET: 1 OF 1 | FILENAME: 1503-00 VW PLAY-RECORD DVD.dwg | REV LEVEL: 00

PROJECT NO. 106792

DRAWING NO. 1503

PLOT: Oct. 25, 2012 1:23 pm

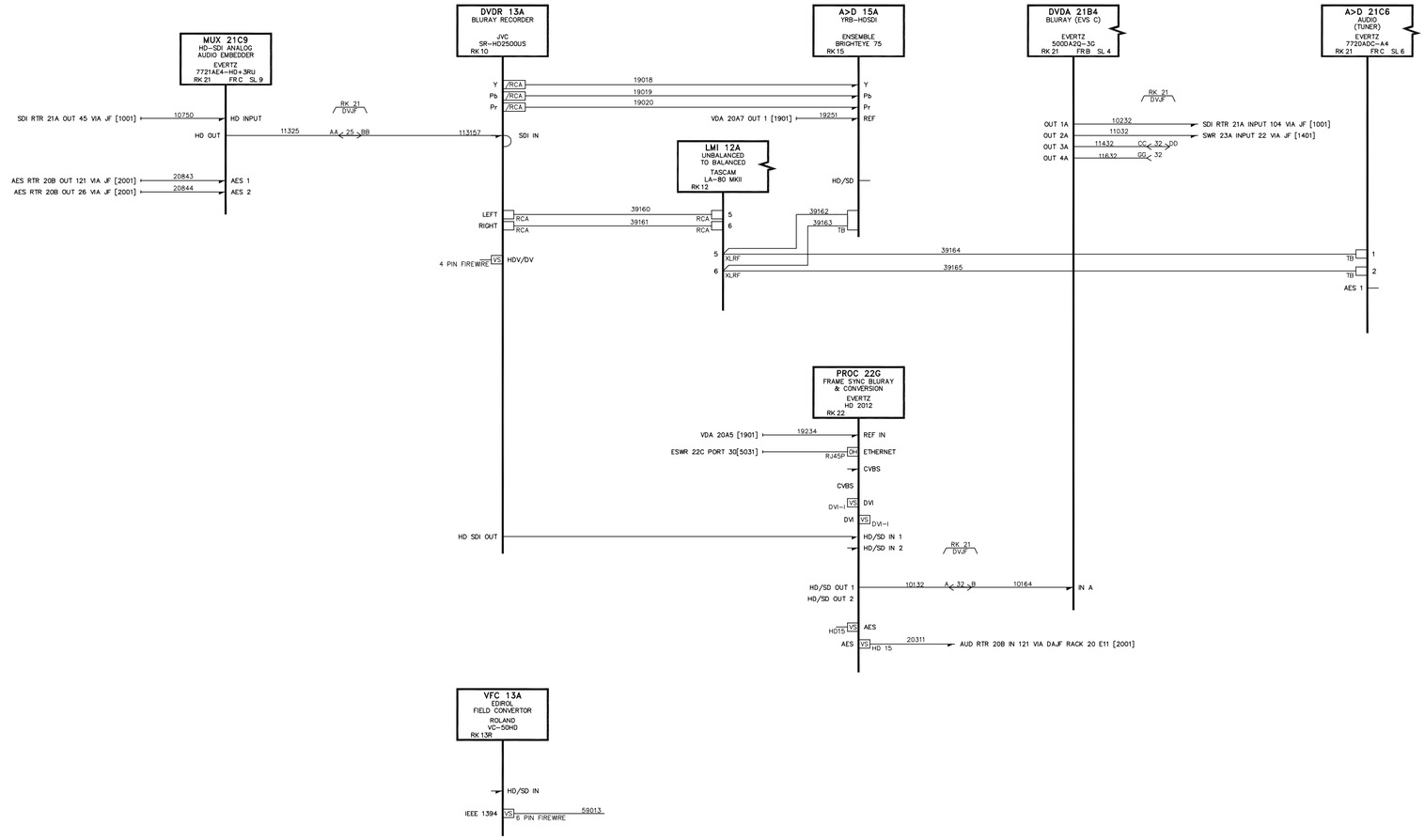

DIVERSIFIED
SYSTEMS

REV	DATE	DESCRIPTION	ENG
00	00/00/00	Initial Draft	F. LAST

ENG: S. MCFARLAND
DRAFTER: S. MCFARLAND
SCALE: NTS
UPDATED: 05/16/12 14:38:32
STATUS: **AS-BUILT**

C Arch

SHEET TITLE:

BLURAY RECORDING VIDEO WIRING DIAGRAM

SHEET: 1 OF 1
FILENAME: 1505-00 VW PLAY-RECORD BLURAY.dwg
REV LEVEL: 00

PROJECT NO. 106792
DRAWING NO. 1505

PLOT: Oct. 25, 2012 1:23 pm

Copyright © 2012 Diversified Systems

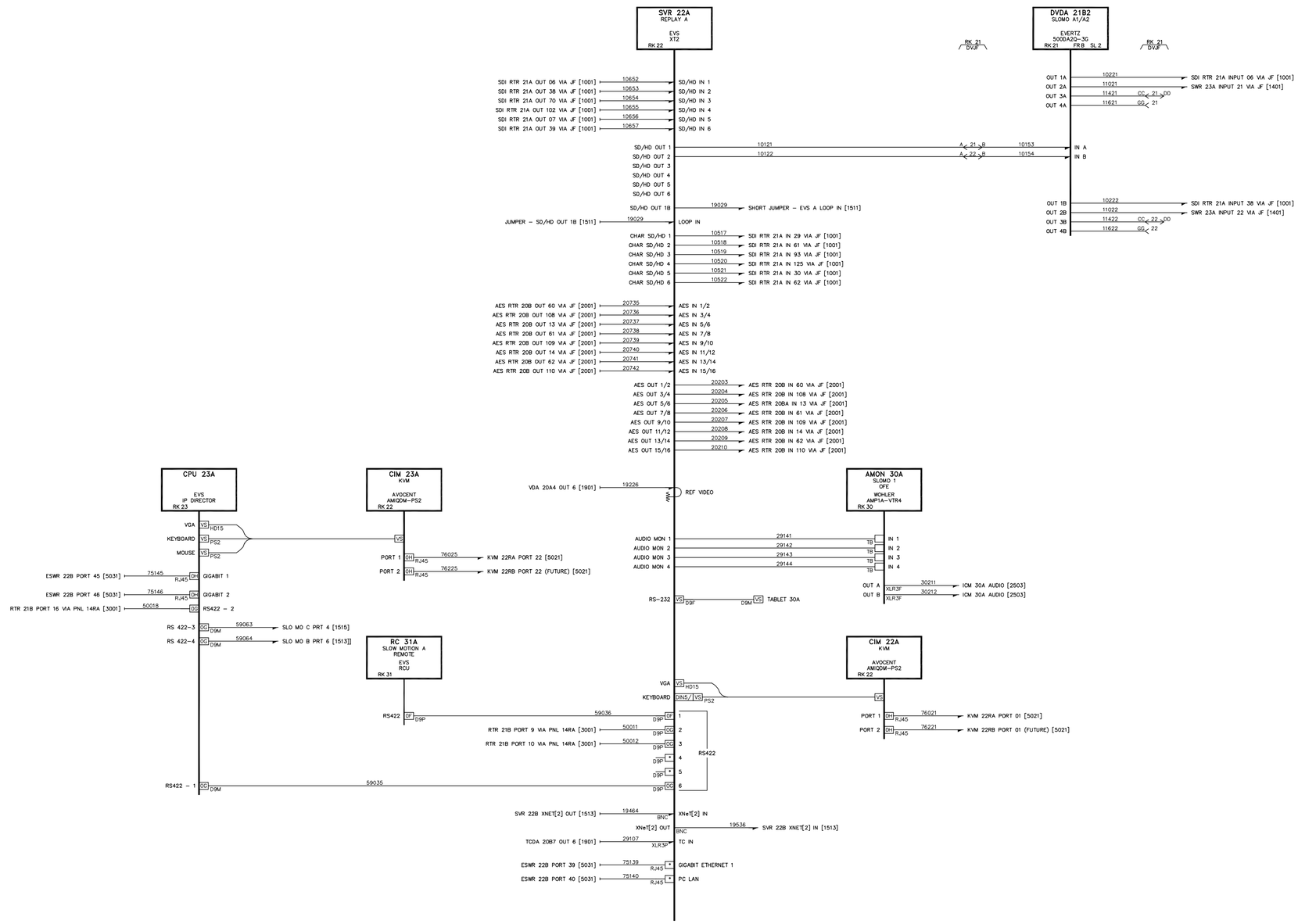

DIVERSIFIED SYSTEMS

REV	DATE	DESCRIPTION	ENG
00	00/00/00	Initial Draft	F. LAST

ENG: S. MCFARLAND
DRAFTER: S. MCFARLAND
SCALE: NTS
UPDATED: 01/16/12 16:33:31
STATUS: **AS-BUILT**

C Arch

SHEET TITLE:

REPLAY SEVER SYSTEM A VIDEO WIRING DIAGRAM

SHEET: 1 OF 1 | FILENAME: 1511-00 VW PLAY-RECORD REPLAY A.dwg | REV LEVEL: 00

PROJECT NO. 106792

DRAWING NO. 1511

PLOT: Oct. 25, 2012 1:23 pm

Copyright © 2012 Diversified Systems

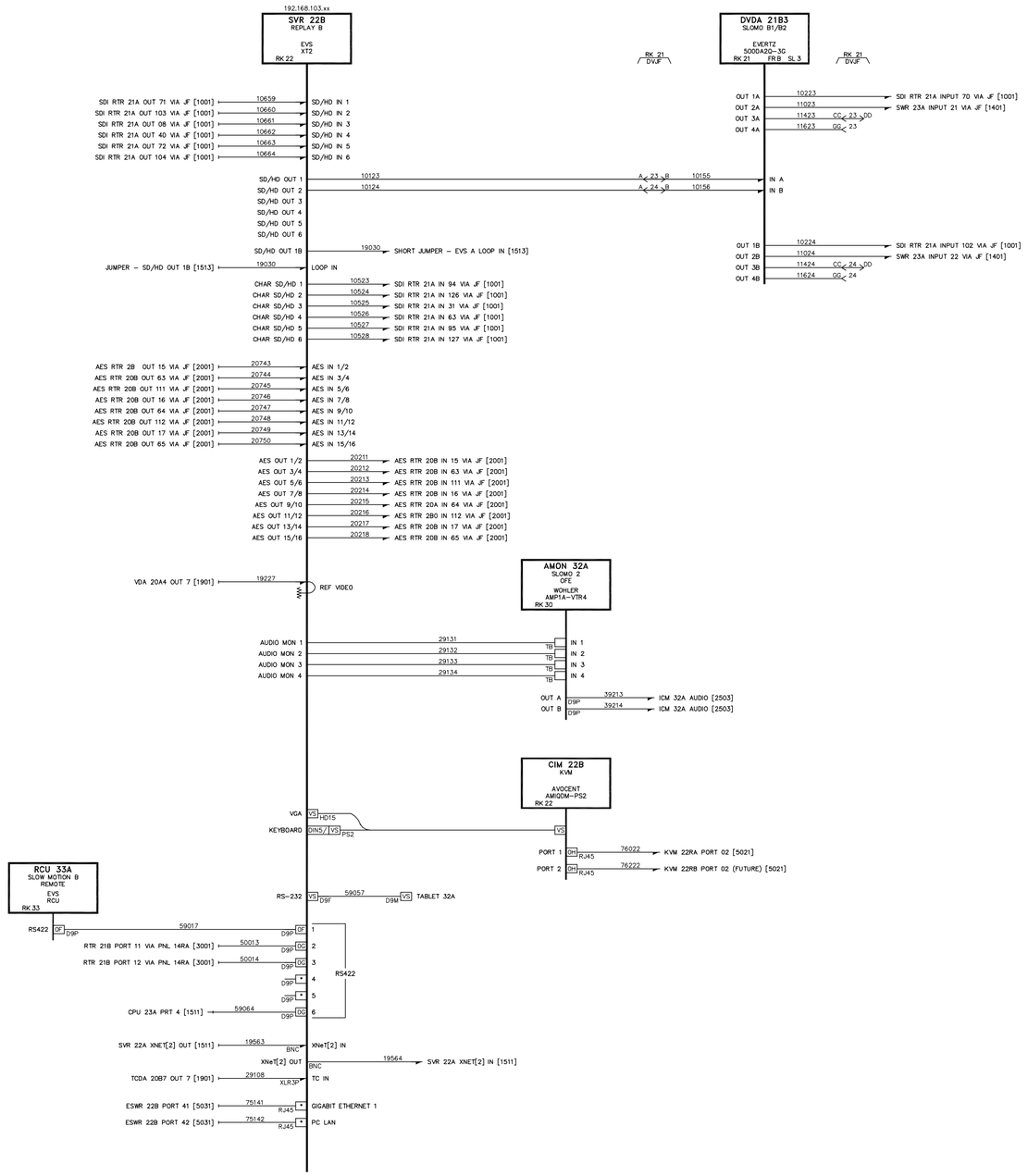

Copyright © 2012 Diversified Systems

DIVERSIFIED SYSTEMS

REV	DATE	DESCRIPTION	ENG
00	00/00/00	Initial Draft	F. LAST

ENG: S. MCFARLAND
DRAFTER: S. MCFARLAND
SCALE: NTS
UPDATED: 10/02/12 13:33:30
STATUS: **AS-BUILT**

C Arch

SHEET TITLE:

REPLAY SERVER SYSTEM B VIDEO WIRING DIAGRAM

PROJECT NO. 106792

DRAWING NO. 1513

SHEET: 1 OF 1 | FILENAME: 1513-00 VW PLAY-RECORD REPLAY B.dwg | REV LEVEL: 00

PLOT: Oct. 25, 2012 1:24 pm

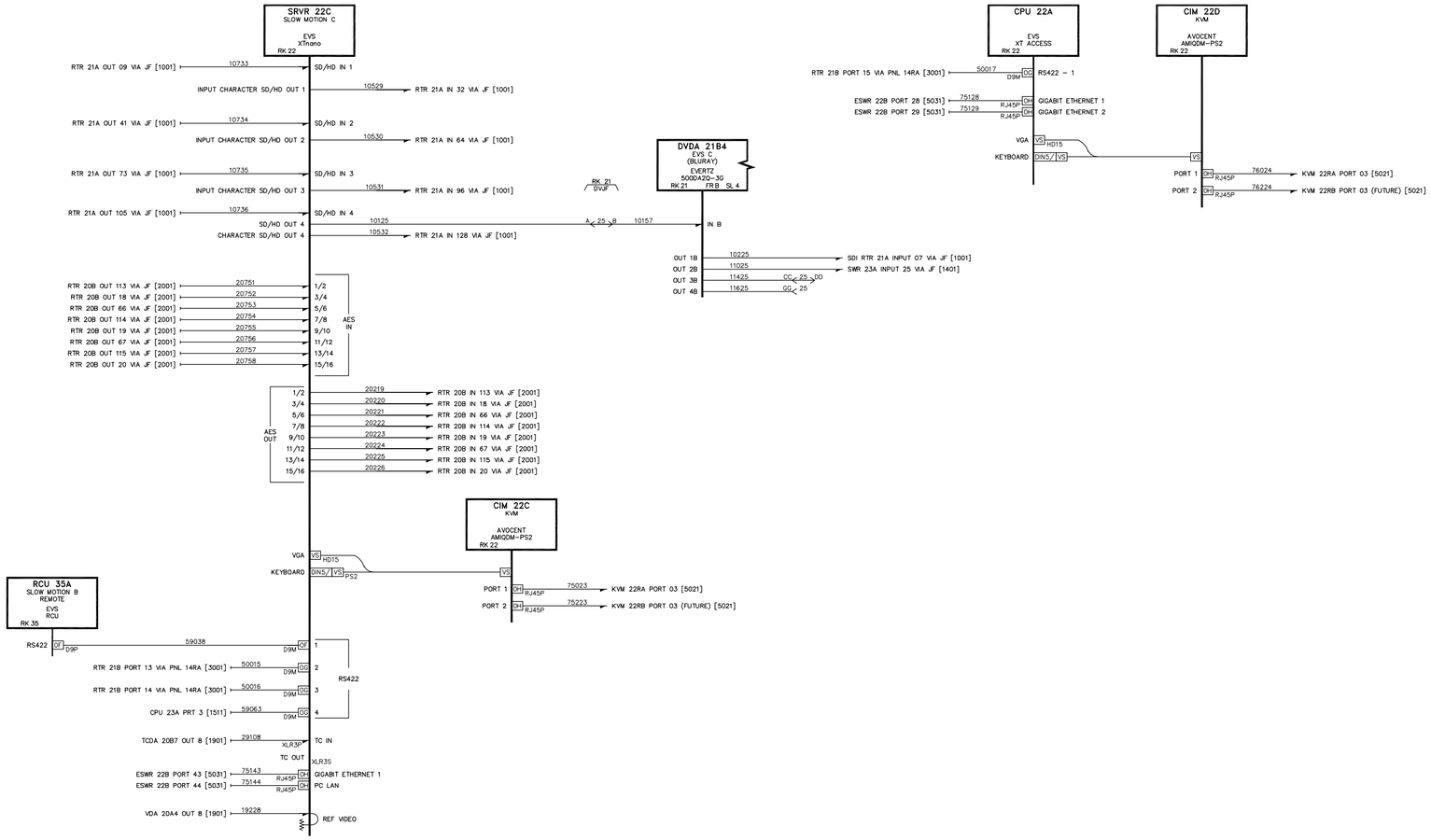

Copyright © 2012 Diversified Systems

DIVERSIFIED SYSTEMS

REV	DATE	DESCRIPTION	ENG
00	00/00/00	Initial Draft	F. LAST

ENG: S. MCFARLAND
DRAFTER: S. MCFARLAND
SCALE: NTS
UPDATED: 01/16/12 16:01:01
STATUS: **AS-BUILT**

C Arch

SHEET TITLE:

SLOMO – INGEST VIDEO WIRING DIAGRAM

SHEET: 1 OF 1
FILENAME: 1515-00 VW PLAY-RECORD INGEST.dwg
REV LEVEL: 00

PROJECT NO. 106792
DRAWING NO. 1515

PLOT: Oct. 25, 2012 1:24 pm

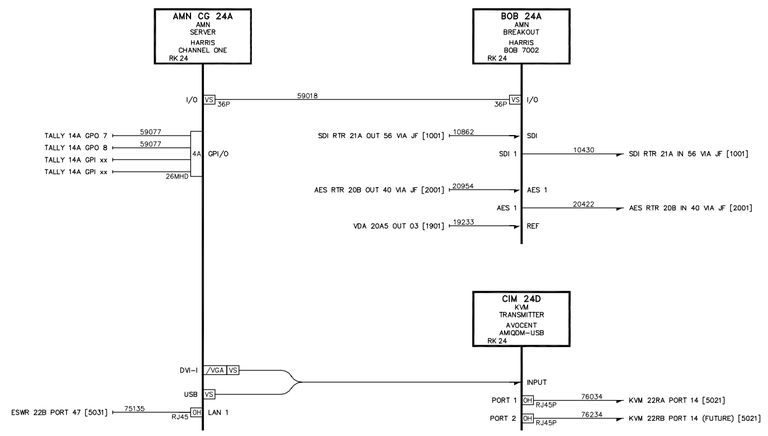

DIVERSIFIED
S Y S T E M S

REV	DATE	DESCRIPTION	ENG
00	00/00/00	Initial Draft	F. LAST

ENG: S. MCFARLAND
DRAFTER: S. MCFARLAND
SCALE: NTS
UPDATED: 01/16/12 16:05:44
STATUS: **AS-BUILT**

C Arch

SHEET TITLE:

ARENA MEDIA NETWORKS SERVER VIDEO WIRING DIAGRAM

SHEET: 1 OF 1 | FILENAME: 1521-00 VW PLAY-RECORD AMN SERVER.dwg | REV LEVEL: 00

PROJECT NO. 106792

DRAWING NO. 1521

Copyright © 2012 Diversified Systems

PLOT: Oct. 25, 2012 1:24 pm

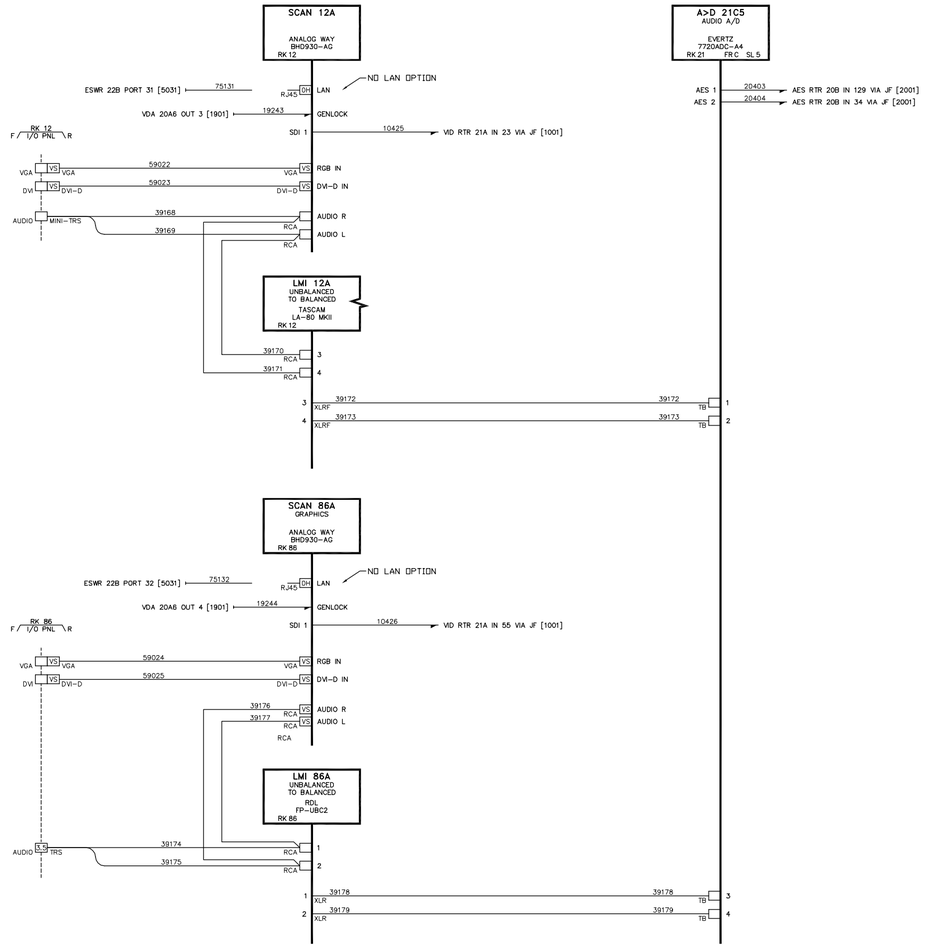

DIVERSIFIED
S Y S T E M S

REV	DATE	DESCRIPTION	ENG
00	00/00/00	Initial Draft	F. LAST

ENG: S. MCFARLAND
DRAFTER: S. MCFARLAND
SCALE: NTS
UPDATED: 10/02/12 13:37:40
STATUS: **AS-BUILT**

C Arch

SHEET TITLE:

SCAN CONVERTORS VIDEO WIRING DIAGRAM

SHEET: 1 OF 1 | FILENAME: 1531-00 VW VIDEO SCALERS.dwg | REV LEVEL: 00

PROJECT NO. 106792

DRAWING NO. 1531

PLOT: Oct. 25, 2012 1:24 pm

Copyright © 2012 Diversified Systems

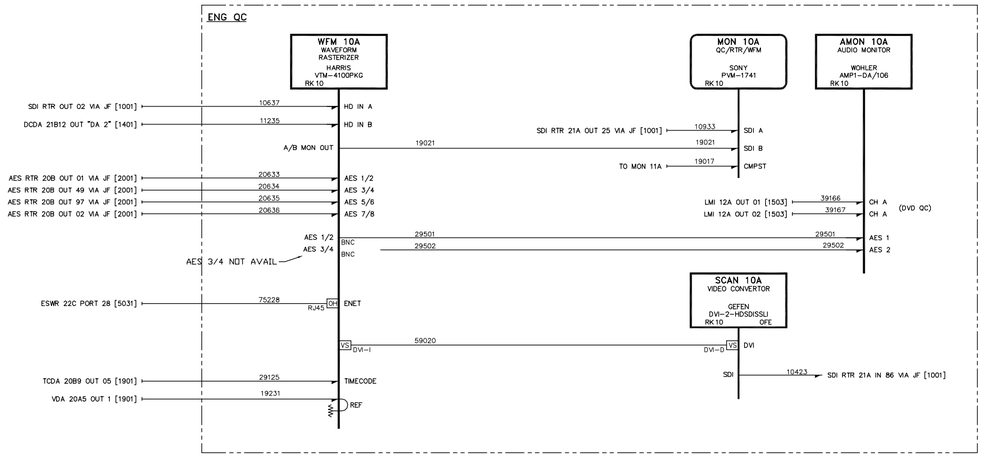

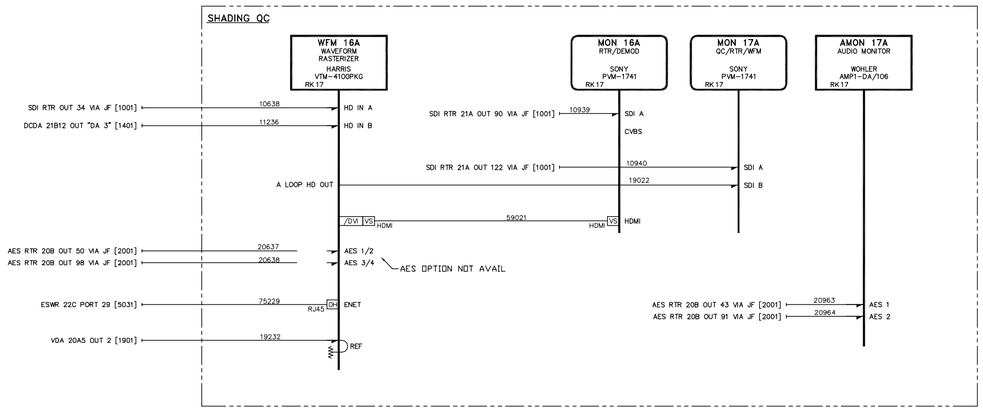

Copyright © 2012 Diversified Systems

DIVERSIFIED SYSTEMS

REV	DATE	DESCRIPTION	ENG
00	00/00/00	Initial Draft	F. LAST

ENG: S. MCFARLAND
DRAFTER: S. MCFARLAND
SCALE: NTS
UPDATED: 10/02/12 13:38:16
STATUS: **AS-BUILT**

C Arch

SHEET TITLE:

QC MONITORING VIDEO WIRING DIAGRAM

SHEET: 1 OF 1
FILENAME: 1601-00 VW QC STATIONS.dwg
REV LEVEL: 00

PROJECT NO. 106792
DRAWING NO. 1601

PLOT: Oct. 25, 2012 1:25 pm

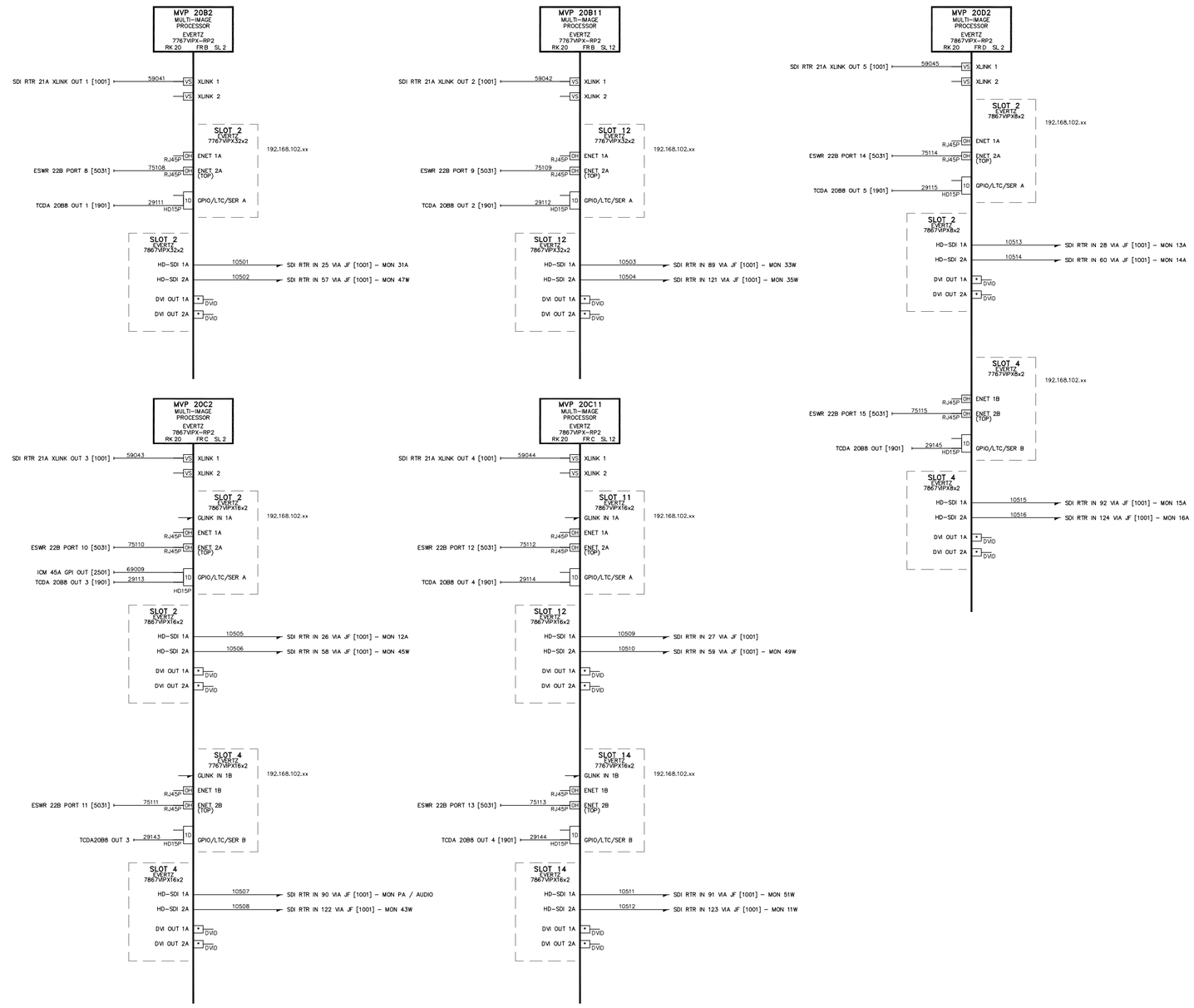

Copyright © 2012 Diversified Systems

DIVERSIFIED SYSTEMS

REV	DATE	DESCRIPTION	ENG

ENG: S. MCFARLAND
DRAFTER: S. MCFARLAND
SCALE: NTS
UPDATED: 10/02/12 13:39:19
STATUS: **AS-BUILT**

C Arch

SHEET TITLE:

VIP MONITORING VIDEO WIRING SYSTEM

SHEET: 1 OF 1 | FILENAME: 1701-00 VW VIP VIDEO MONITORING.dwg | REV LEVEL: 00

PROJECT NO. 106792

DRAWING NO. 1701

PLOT: Oct. 25, 2012 1:24 pm

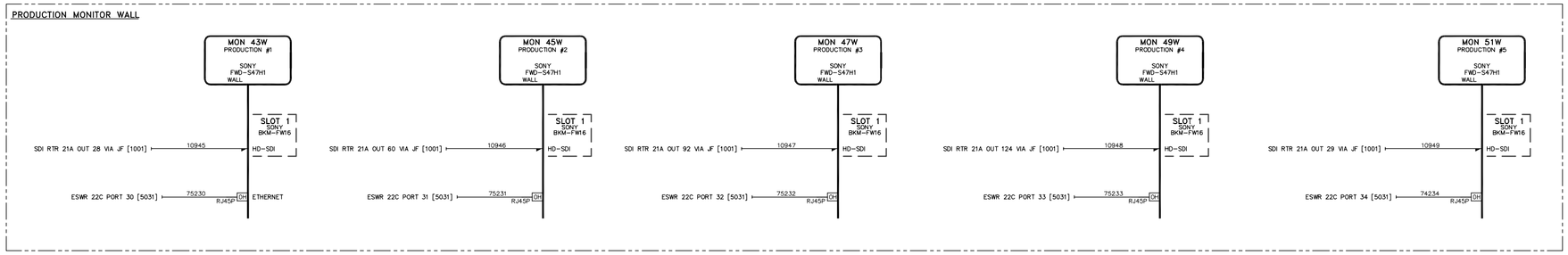

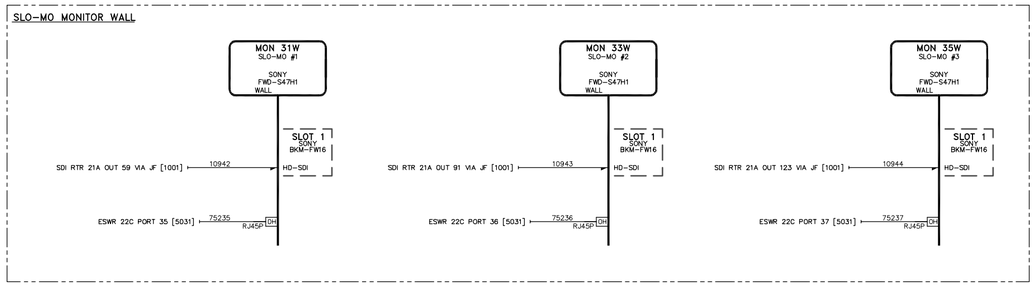

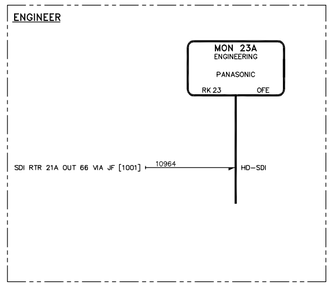

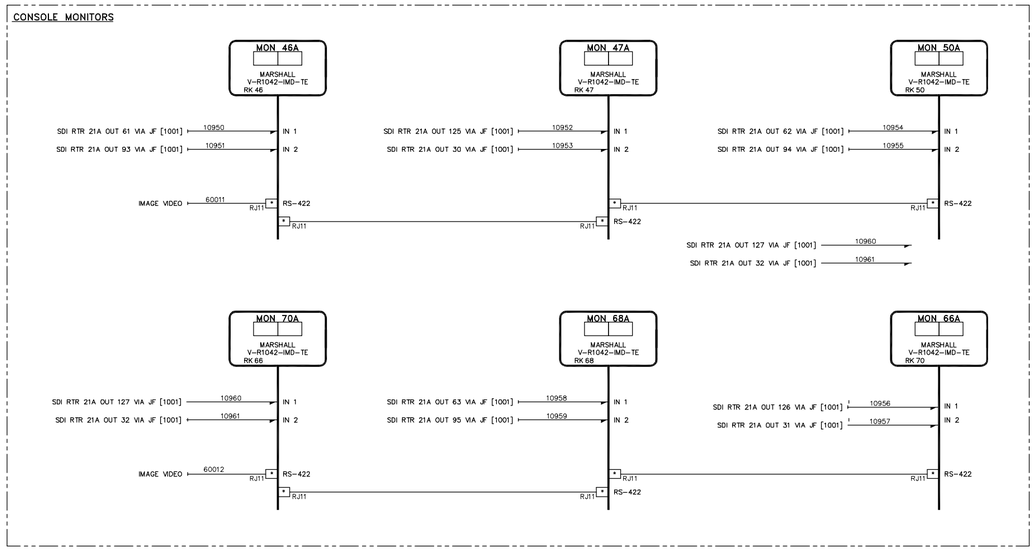

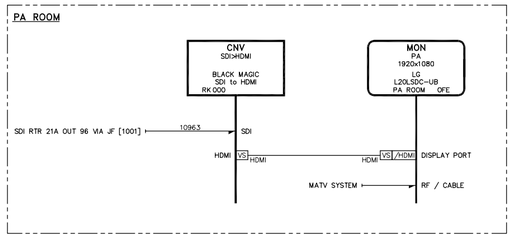

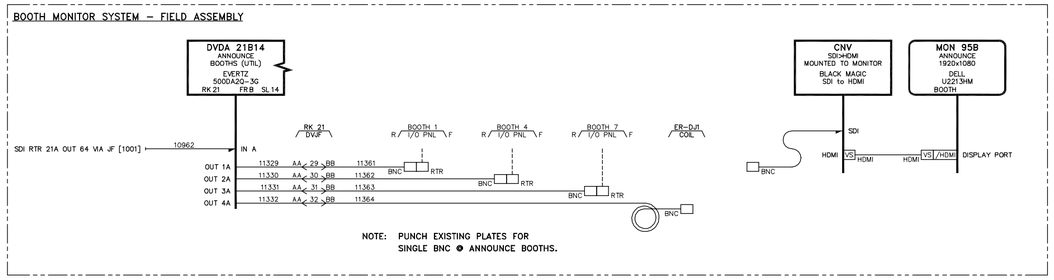

DIVERSIFIED SYSTEMS

REV	DATE	DESCRIPTION	ENG
00	00/00/00	Initial Draft	F. LAST

ENG: S. MCFARLAND
DRAFTER: S. MCFARLAND
SCALE: NTS
UPDATED: 00/00/00 00:00:00
STATUS: **AS-BUILT**

C Arch

SHEET TITLE:

VIDEO MONITORING
VIDEO WIRING DIAGRAM

SHEET: 1 OF 1 | FILENAME: 1705-00 VW VIDEO MONITORING.dwg | REV LEVEL: 00

PROJECT NO. 106792

DRAWING NO. 1705

PLOT: Oct. 25, 2012 1:25 pm

Copyright © 2012 Diversified Systems

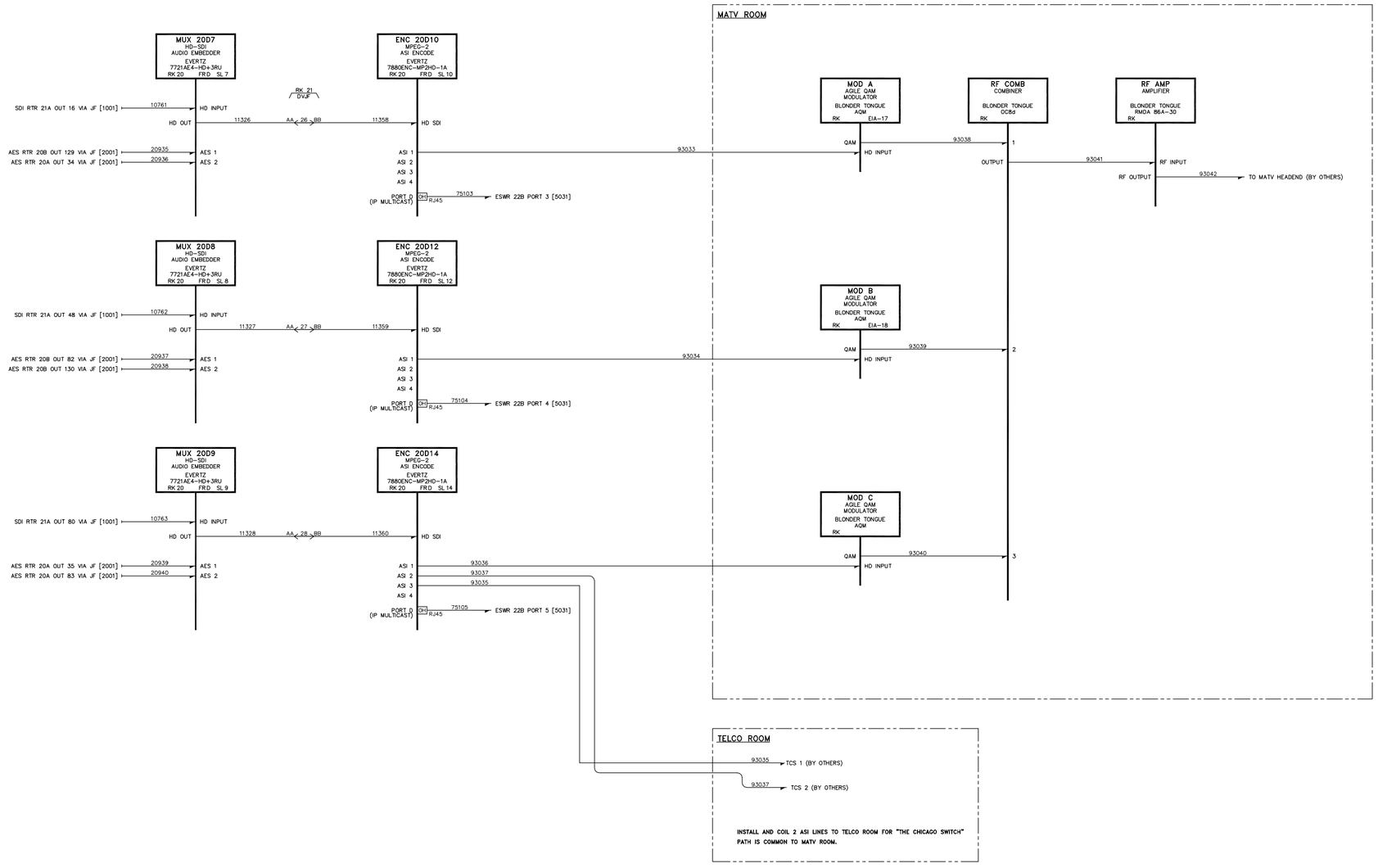

DIVERSIFIED SYSTEMS

REV	DATE	DESCRIPTION	ENG
00	00/00/00	Initial Draft	F. LAST

ENG: S. MCFARLAND
DRAFTER: S. MCFARLAND
SCALE: NTS
UPDATED: 01/16/12 14:37:55
STATUS: **AS-BUILT**

C Arch

SHEET TITLE:

MATV CONTRIBUTION VIDEO WIRING DIAGRAM

SHEET: 1 OF 1 | FILENAME: 1801-00 VW MATV.dwg | REV LEVEL: 00

PROJECT NO. 106792

DRAWING NO. 1801

PLOT: Oct. 25, 2012 1:25 pm

Copyright © 2012 Diversified Systems

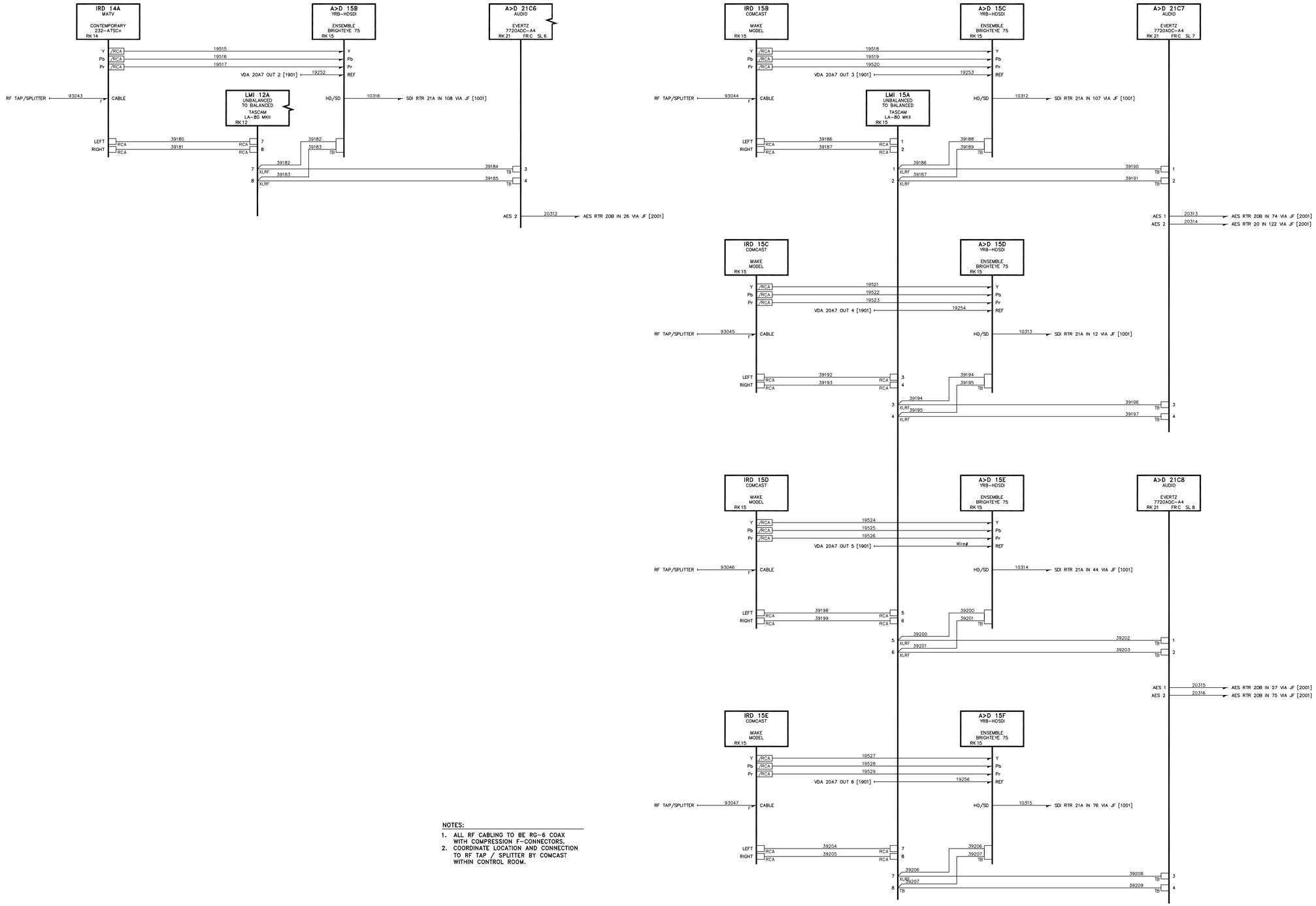

NOTES:

1. ALL RF CABLING TO BE RG-6 COAX WITH COMPRESSION F-CONNECTORS.
2. COORDINATE LOCATION AND CONNECTION TO RF TAP / SPLITTER BY COMCAST WITHIN CONTROL ROOM.

DIVERSIFIED SYSTEMS

REV	DATE	DESCRIPTION	ENG
00	00/00/00	Initial Draft	F. LAST

ENG: S. MCFARLAND
DRAFTER: S. MCFARLAND
SCALE: NTS
UPDATED: 01/16/12 14:41:26
STATUS: AS-BUILT

C Arch

SHEET TITLE:

CABLE & SATELLITE DEMOD VIDEO WIRING DIAGRAM

SHEET: 1 OF 1 | FILENAME: 1811-00 VW DEMOD.dwg | REV LEVEL: 00

PROJECT NO. 106792

DRAWING NO. 1811

PLOT: Oct. 25, 2012 1:25 pm

Copyright © 2012 Diversified Systems

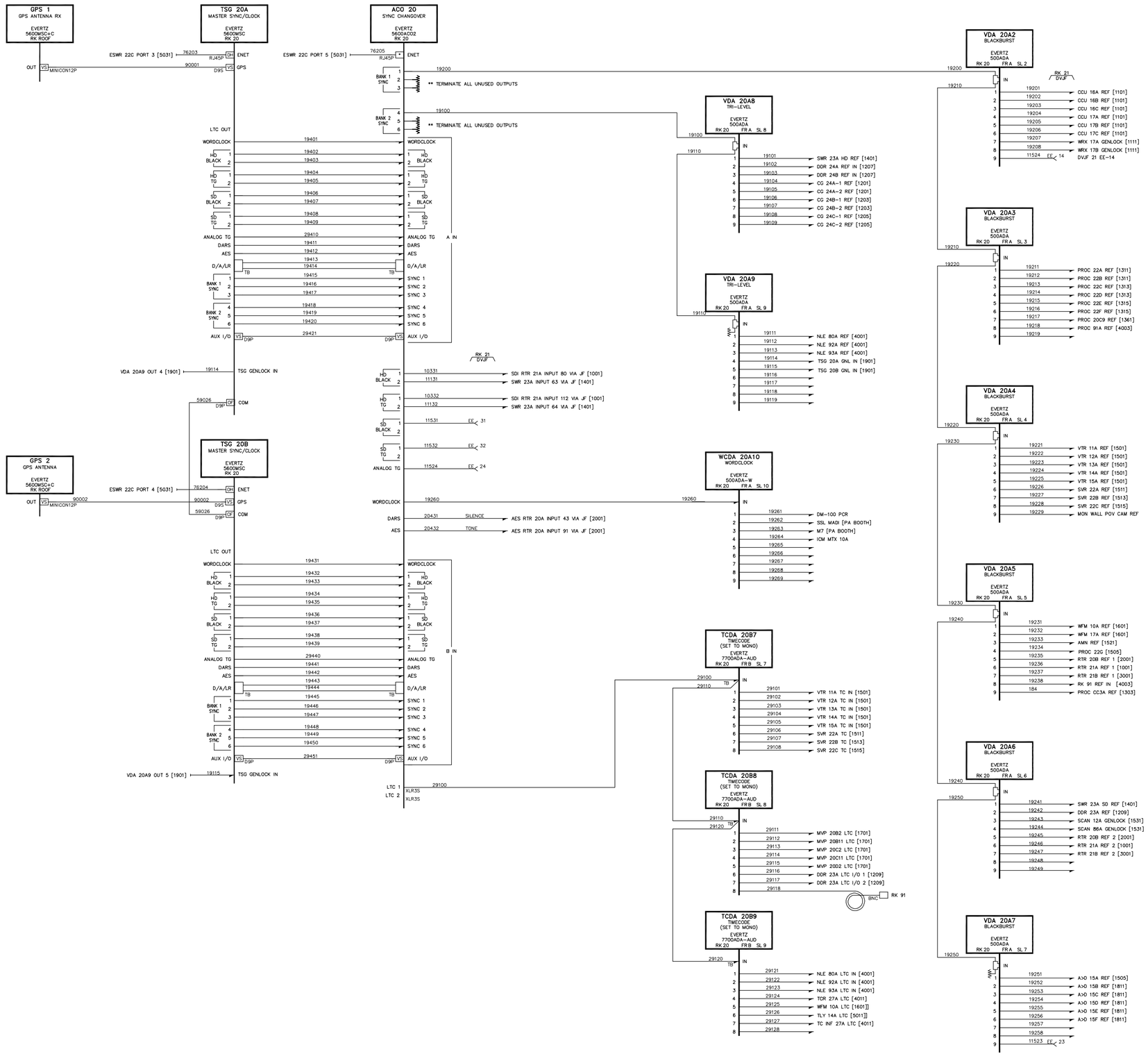

Copyright © 2012 Diversified Systems

DIVERSIFIED SYSTEMS

REV	DATE	DESCRIPTION	ENG
00	00/00/00	Initial Draft	F. LAST

ENG: S. MCFARLAND
DRAFTER: S. MCFARLAND
SCALE: NTS
UPDATED: 10/02/12 11:54:33
STATUS: **AS-BUILT**

C Arch

SHEET TITLE:

MASTER SYNC & REFERENCE VIDEO WIRING DIAGRAM

SHEET: 1 OF 1
FILENAME: 1901-01 VW MASTER SYNC.dwg
REV LEVEL: 01

PROJECT NO. 106792
DRAWING NO. 1901

PLOT: Oct. 25, 2012 1:26 pm

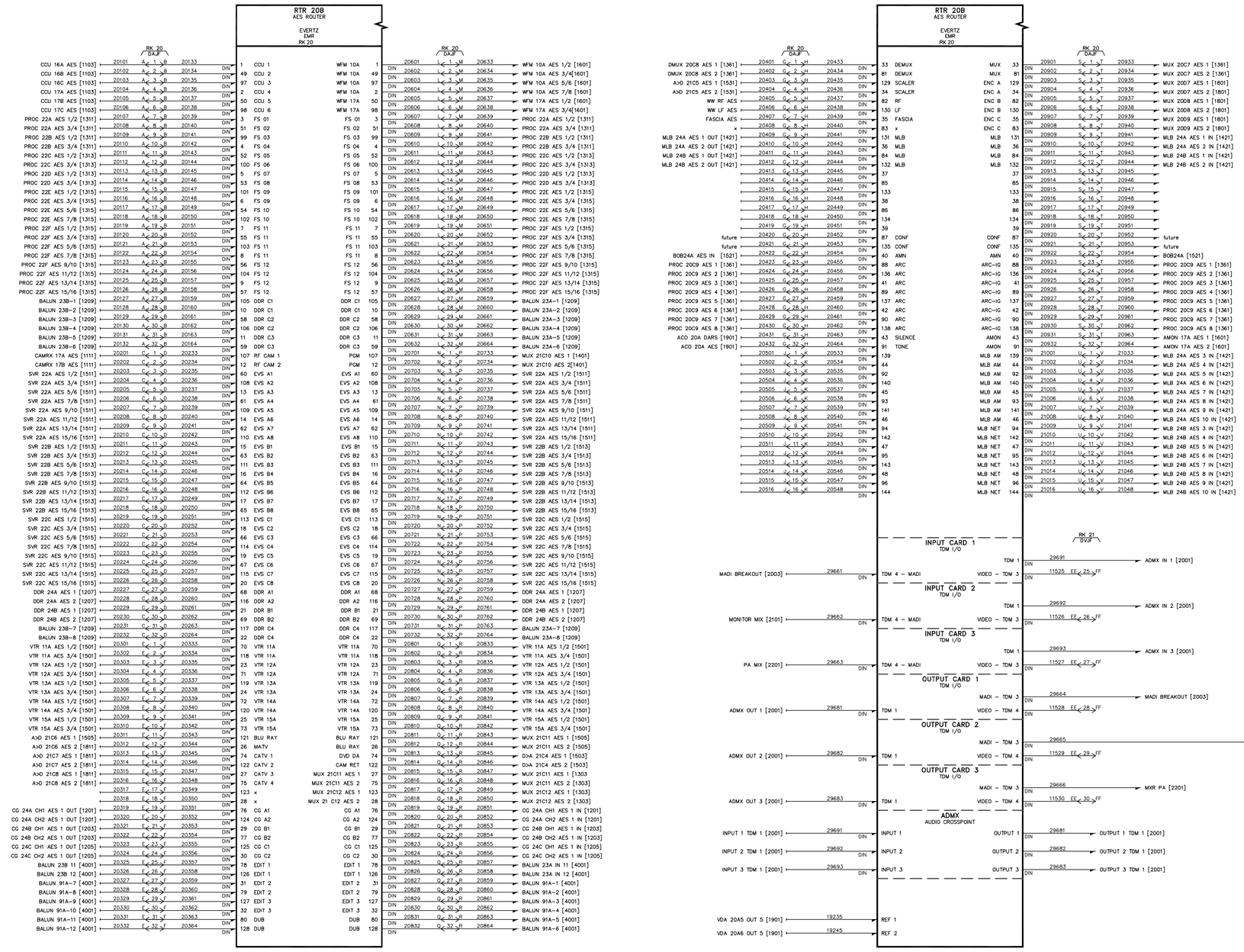

Copyright © 2012 Diversified Systems

DIVERSIFIED SYSTEMS

REV	DATE	DESCRIPTION	ENG
00	00/00/00	Initial Draft	F. LAST

ENG: S. MCFARLAND
DRAFTER: S. MCFARLAND
SCALE: NTS
UPDATED: 10/02/12 13:40:29
STATUS: **AS-BUILT**

C Arch

SHEET TITLE:

AUDIO ROUTER AUDIO WIRING DIAGRAM

PROJECT NO. 106792

DRAWING NO. 2001

SHEET: 1 OF 1 | FILENAME: 2001-00 AW AUDIO ROUTER.dwg | REV LEVEL: 00

PLOT: Oct. 25, 2012 1:26 pm

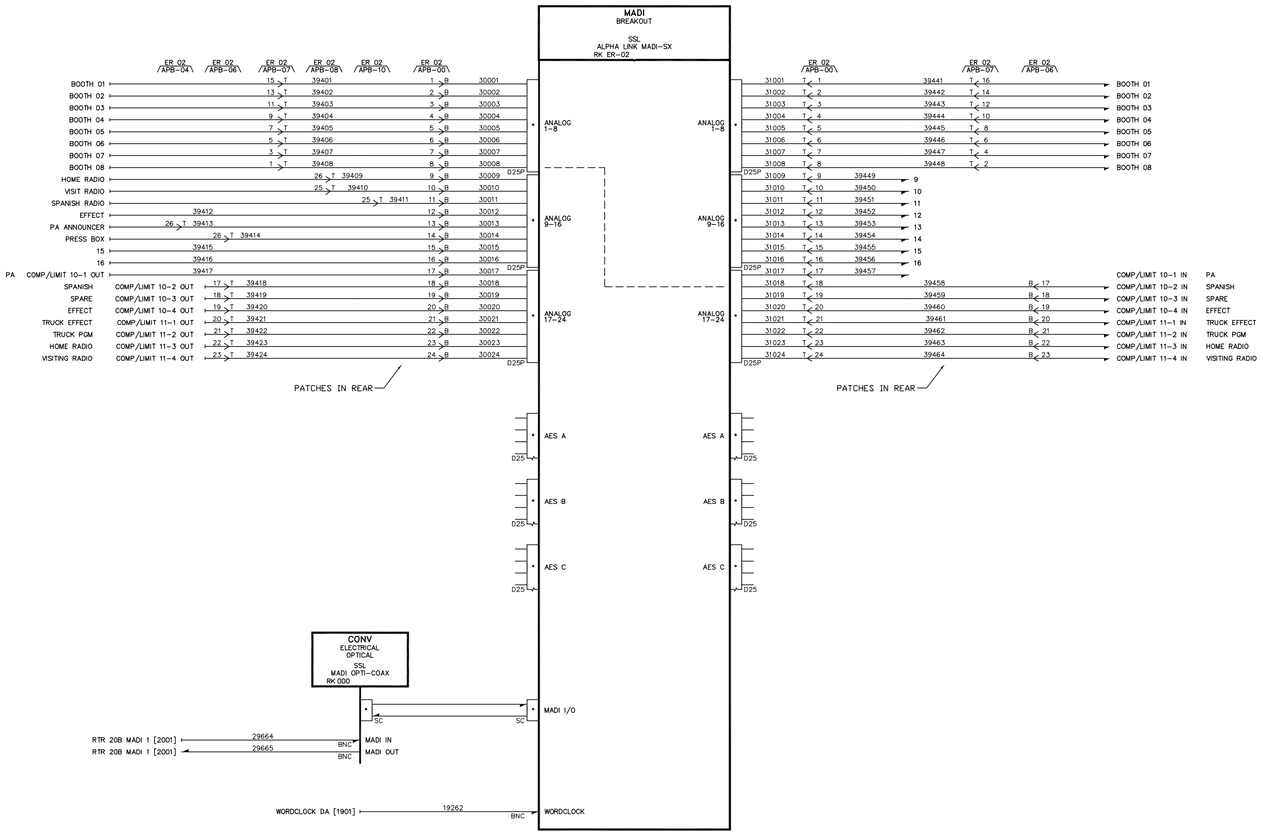

NOTES:

1. TERMINATE SSL TO SINGLE JACKFIELD.
2. NORMALS TO BE WIRED TO AUDIO DEVICES BY OTHERS.

DIVERSIFIED SYSTEMS

REV	DATE	DESCRIPTION	ENG
00	00/00/00	Initial Draft	F. LAST

ENG: S. MCFARLAND
DRAFTER: S. MCFARLAND
SCALE: NTS
UPDATED: 10/02/12 13:41:23
STATUS: AS-BUILT

C Arch

SHEET TITLE:
AUDIO ROUTER – MADI BREAKOUT
AUDIO WIRING DIAGRAM

SHEET: 1 OF 1 | FILENAME: 2003-00 AW AUDIO ROUTER.dwg | REV LEVEL: 00

PROJECT NO. 106792
DRAWING NO. 2003

PLOT: Oct. 25, 2012 1:31 pm

Copyright © 2012 Diversified Systems

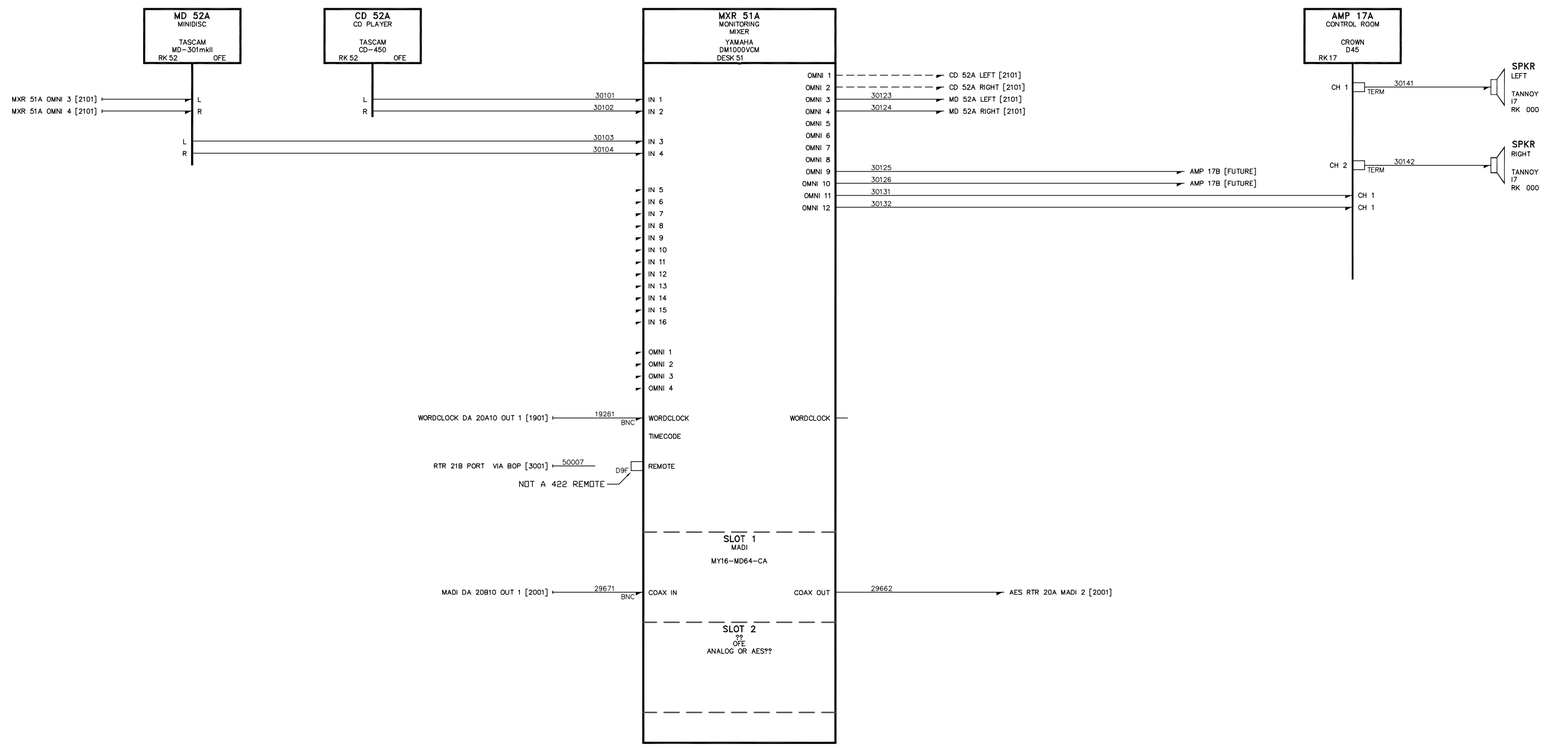

Copyright © 2012 Diversified Systems

DIVERSIFIED SYSTEMS

REV	DATE	DESCRIPTION	ENG
00	00/00/00	Initial Draft	F. LAST

ENG: S. MCFARLAND
DRAFTER: S. MCFARLAND
SCALE: NTS
UPDATED: 10/02/12 11:37:02
STATUS: **AS-BUILT**

C Arch

SHEET TITLE:

AUDIO MIXER – MONITORING
AUDIO WIRING DIAGRAM

SHEET: 1 OF 1
FILENAME: 2101-00 AW MIXER.dwg
REV LEVEL: 00

PROJECT NO. 106792
DRAWING NO. 2101

PLOT: Oct. 25, 2012 1:31 pm

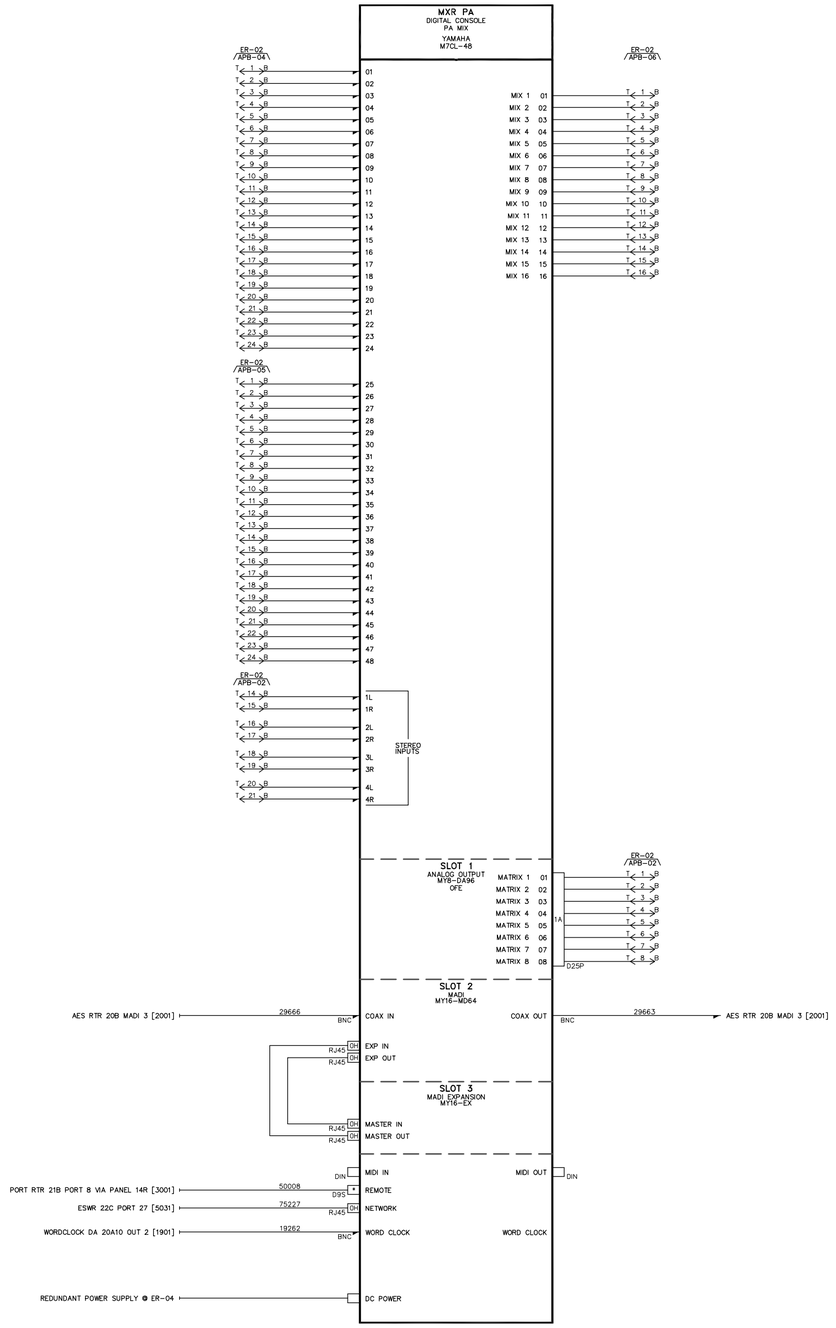

NOTES:

1. UTILIZE EXISTING CABLING TO EXISTING ANALOG AUDIO JACKFIELDS IN PA RACK.
2. RE-TERMINATE CABLING AS NEEDED: REPLACE 1/4" WITH XLR3M @ INPUTS AND XLR3F @ OUTPUTS.
3. UTILIZE EXISTING AUDIO SYSTEM LABELING WHERE POSSIBLE.
4. COORDINATE REDUNDANT POWER SUPPLY LOCATION IN RACK ER-04.
5. PROVIDE NEW CABLING FOR WORDCLOCK, REMOTE, MADI, AND NETWORK.

Copyright © 2012 Diversified Systems

DIVERSIFIED SYSTEMS

REV	DATE	DESCRIPTION	ENG
00	00/00/00	Initial Draft	F. LAST

ENG: S. MCFARLAND
DRAFTER: S. MCFARLAND
SCALE: NTS
UPDATED: 01/20/12 22:43:04
STATUS: AS-BUILT

C Arch

SHEET TITLE:

AUDIO MIXER – PA
AUDIO WIRING DIAGRAM

SHEET: 1 OF 1 | FILENAME: 2201-00 AW MIXER-PA.dwg | REV LEVEL: 00

PROJECT NO. 106792

DRAWING NO. 2201

PLOT: Oct. 25, 2012 1:31 pm

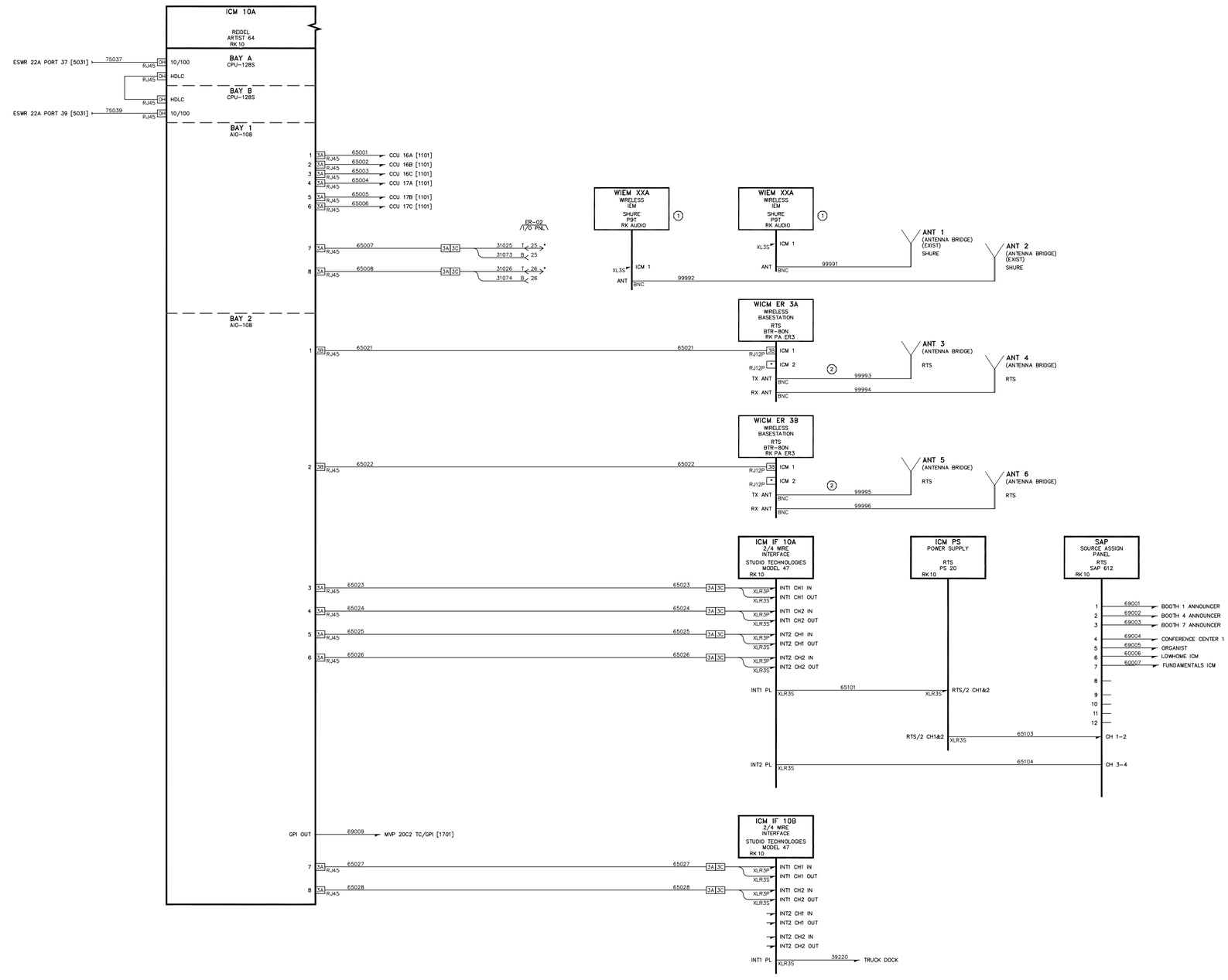

NOTES:

1. WIRELESS IFB TRANSMITTERS, ANTENNA CABLES AND ANTENNAE ARE EXISTING
2. WIRELESS ICM ANTENNA CABLES ARE EXISTING. NEW TRANSMITTERS AND ANTENNAE

DIVERSIFIED SYSTEMS

REV	DATE	DESCRIPTION	ENG
00	00/00/00	Initial Draft	F. LAST

ENG: S. MCFARLAND
DRAFTER: S. MCFARLAND
SCALE: NTS
UPDATED: 05/16/12 10:08:31
STATUS: **AS-BUILT**

C Arch

SHEET TITLE:

INTERCOM SYSTEM ANALOG AUDIO WIRING DIAGRAM

SHEET: 1 OF 1 | FILENAME: 2501-00 ICM INTERCOM ANALOG.dwg | REV LEVEL: 00

PROJECT NO. 106792

DRAWING NO. 2501

Copyright © 2012 Diversified Systems

PLOT: Oct. 25, 2012 1:32 pm

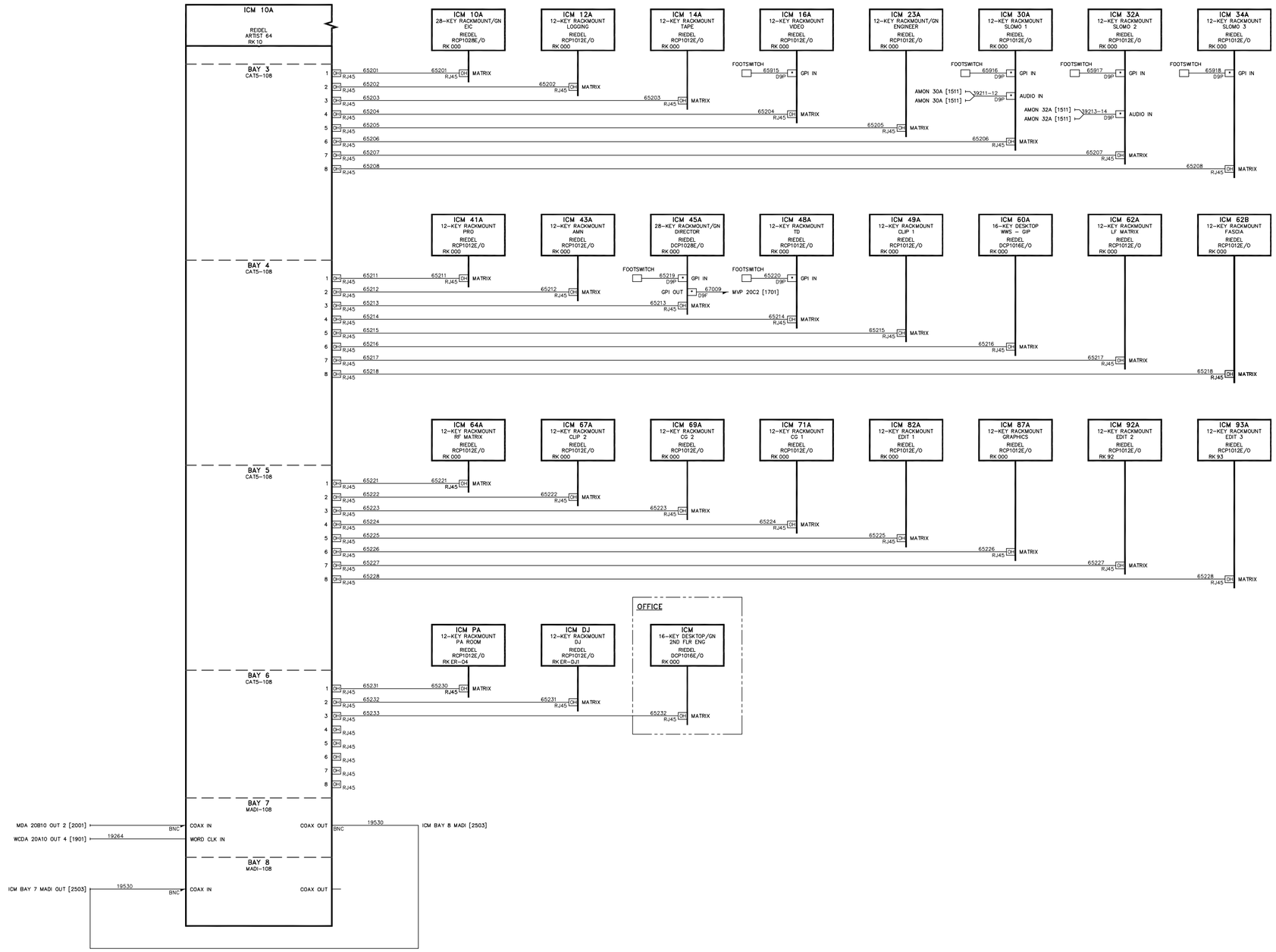

Copyright © 2012 Diversified Systems

DIVERSIFIED SYSTEMS

REV	DATE	DESCRIPTION	ENG
00	00/00/00	Initial Draft	F. LAST

ENG: S. MCFARLAND
DRAFTER: S. MCFARLAND
SCALE: NTS
UPDATED: 01/05/12 23:13:44
STATUS: AS-BUILT

C Arch

SHEET TITLE:
INTERCOM SYSTEM MATRIX AUDIO WIRING DIAGRAM

SHEET: 1 OF 1 | FILENAME: 2503-00 ICM INTERCOM MATRIX.dwg | REV LEVEL: 00

PROJECT NO. 106792
DRAWING NO. 2503

PLOT: Oct. 25, 2012 1:32 pm

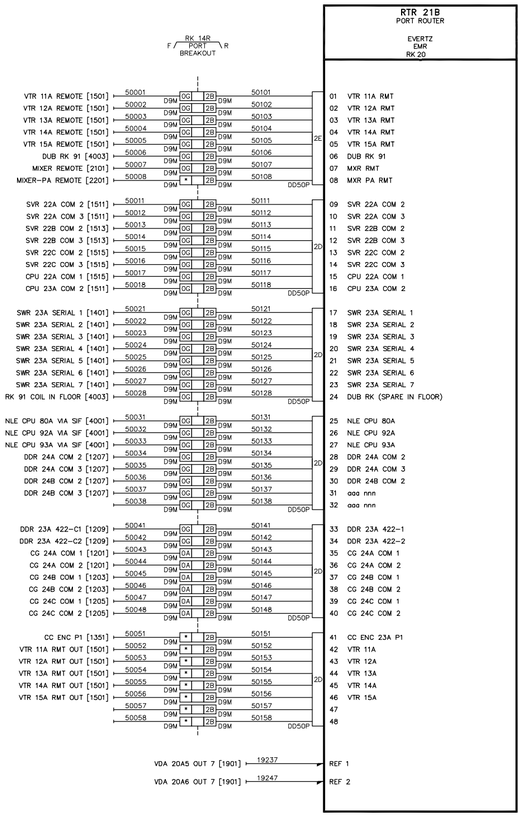

Copyright © 2012 Diversified Systems

DIVERSIFIED SYSTEMS

REV	DATE	DESCRIPTION	ENG
00	00/00/00	Initial Draft	F. LAST

ENG: S. MCFARLAND
DRAFTER: S. MCFARLAND
SCALE: NTS
UPDATED: 01/05/12 08:16:50
STATUS: **AS-BUILT**

C Arch

SHEET TITLE:

PORT ROUTER AUDIO WIRING DIAGRAM

SHEET: 1 OF 1 | FILENAME: 3001-00 CW PORT ROUTER.dwg | REV LEVEL: 00

PROJECT NO. 106792

DRAWING NO. 3001

PLOT: Oct. 25, 2012 1:31 pm

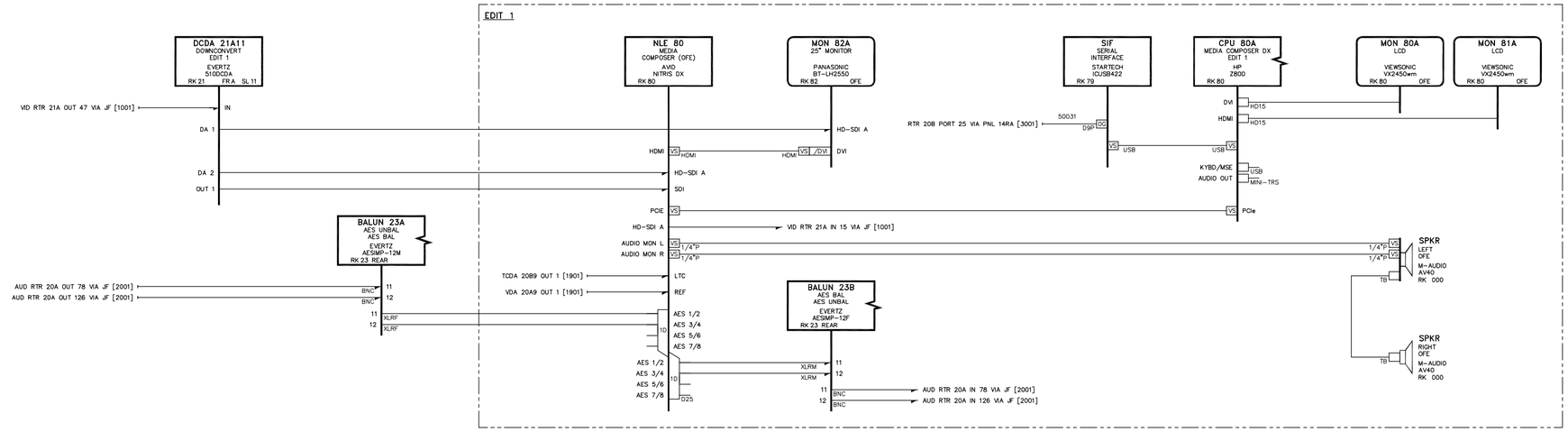

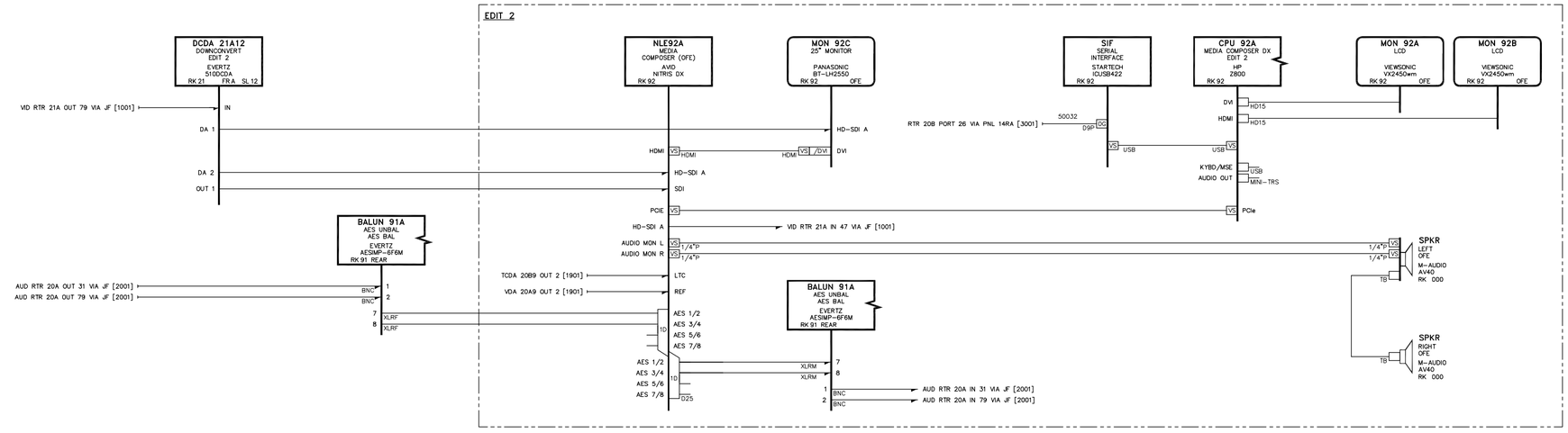

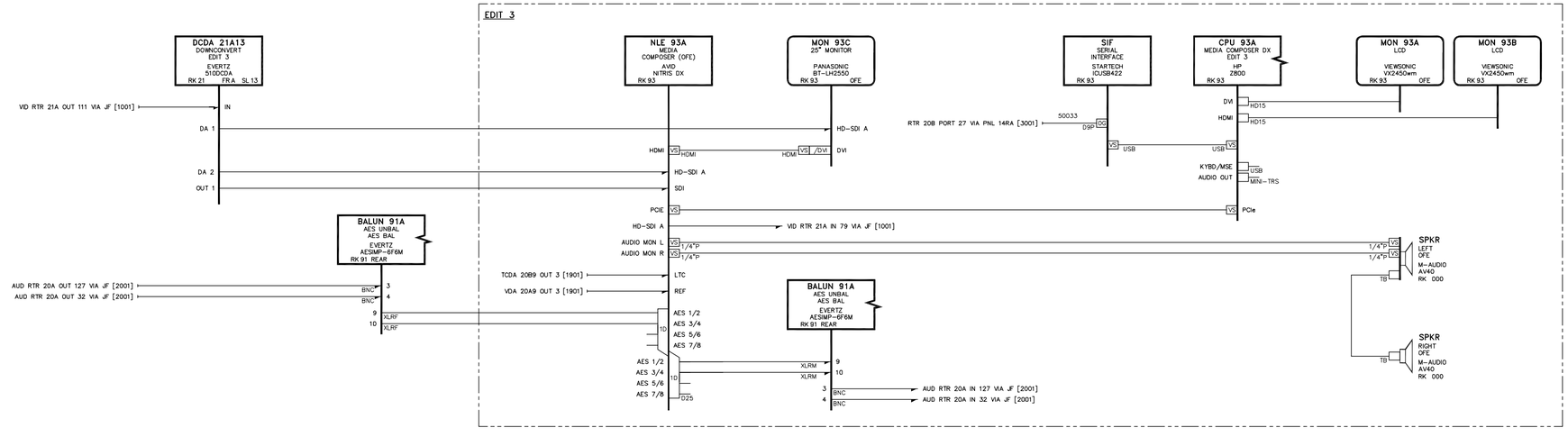

DIVERSIFIED
S Y S T E M S

REV	DATE	DESCRIPTION	ENG
00	00/00/00	Initial Draft	F. LAST

ENG: S. MCFARLAND
DRAFTER: S. MCFARLAND
SCALE: NTS
UPDATED: 10/02/12 13:47:32
STATUS: **AS-BUILT**

C Arch

SHEET TITLE:

EDIT SYSTEMS VIDEO WIRING DIAGRAM

SHEET: 1 OF 1 | FILENAME: 4001-00 VW EDIT SYSTEMS.dwg | REV LEVEL: 00

PROJECT NO. 106792

DRAWING NO. 4001

PLOT: Oct. 25, 2012 1:31 pm

Copyright © 2012 Diversified Systems

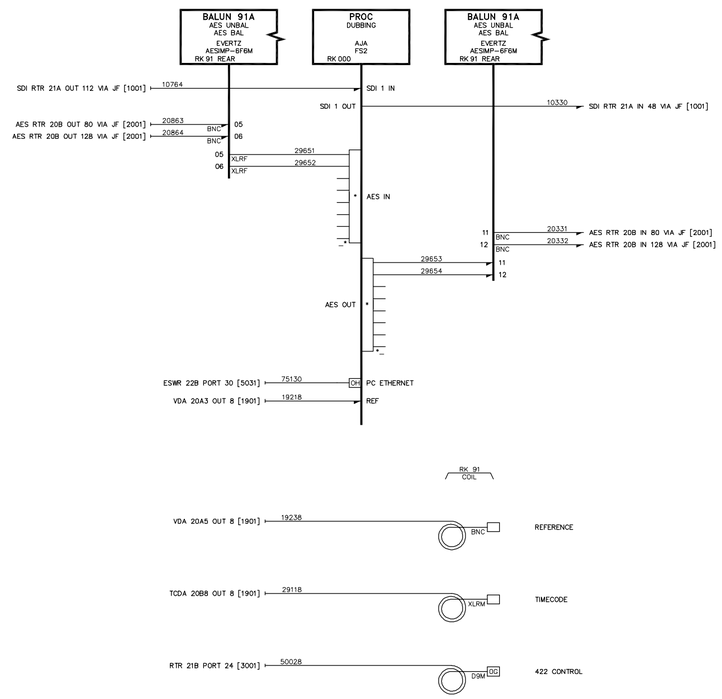

DIVERSIFIED
SYSTEMS

REV	DATE	DESCRIPTION	ENG
00	00/00/00	Initial Draft	F. LAST

ENG: S. MCFARLAND
DRAFTER: S. MCFARLAND
SCALE: NTS
UPDATED: 00/00/00 00:00:00
STATUS: **AS-BUILT**

C Arch

SHEET TITLE:

DUB RACK VIDEO WIRING DIAGRAM

SHEET: 1 OF 1
FILENAME: 4003-00 VW EDIT DUB RACK.dwg
REV LEVEL: 00

PROJECT NO. 106792
DRAWING NO. 4003

PLOT: Oct. 25, 2012 1:32 pm

Copyright © 2012 Diversified Systems

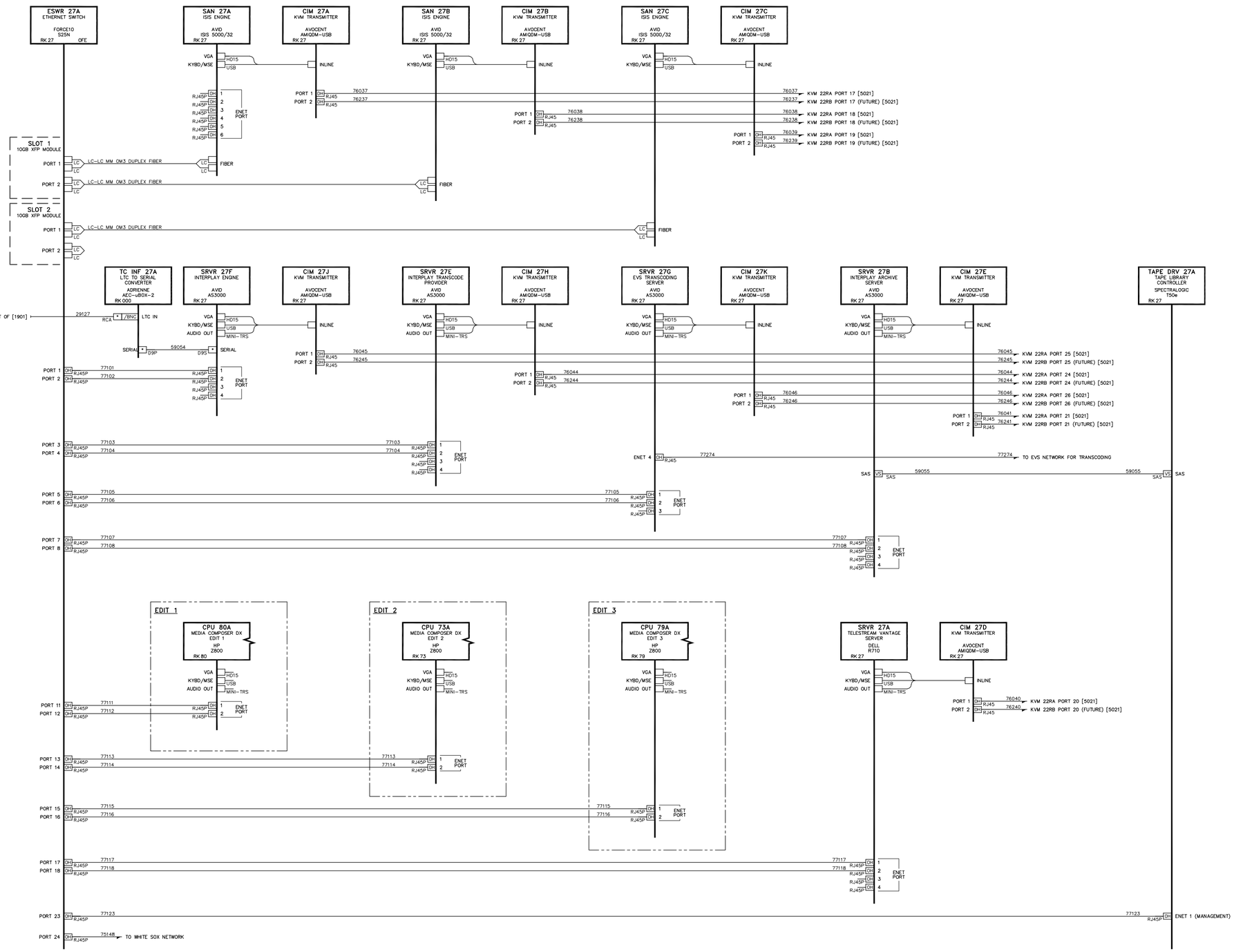

Copyright © 2012 Diversified Systems

DIVERSIFIED SYSTEMS

REV	DATE	DESCRIPTION	ENG
00	00/00/00	Initial Draft	F. LAST

ENG: S. MCFARLAND
DRAFTER: S. MCFARLAND
SCALE: NTS
UPDATED: 10/02/12 13:50:32
STATUS: **AS-BUILT**

C Arch

SHEET TITLE:

EDIT NETWORK SYSTEM CONTROL WIRING DIAGRAM

SHEET: 1 OF 1 | FILENAME: 4011-00 CW EDIT NETWORK.dwg | REV LEVEL: 00

PROJECT NO. 106792

DRAWING NO. 4011

PLOT: Oct. 25, 2012 1:32 pm

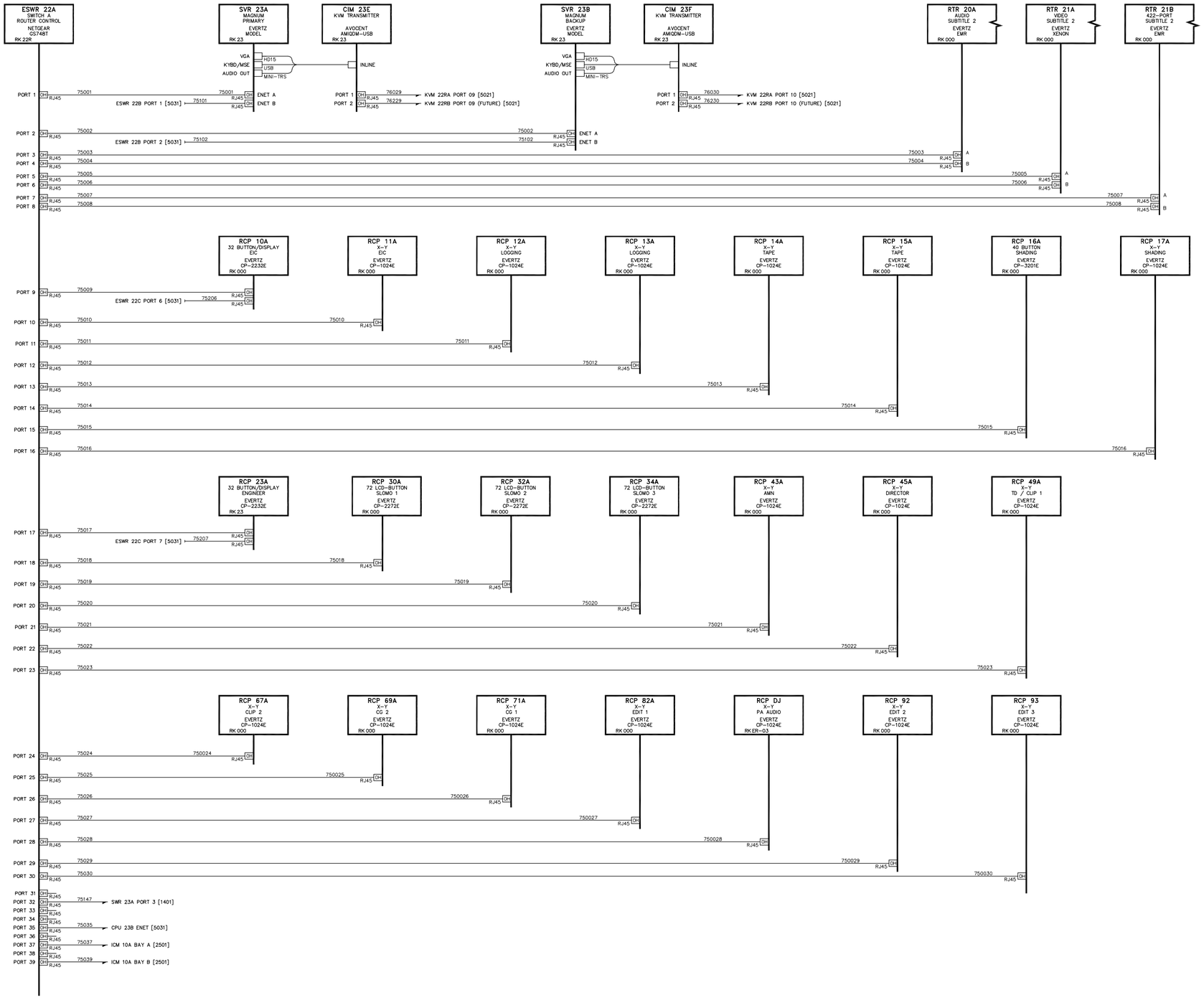

DIVERSIFIED SYSTEMS

REV	DATE	DESCRIPTION	ENG
00	00/00/00	Initial Draft	F. LAST

ENG: S. MCFARLAND
DRAFTER: S. MCFARLAND
SCALE: NTS
UPDATED: 05/16/12 08:26:41
STATUS: **AS-BUILT**

C Arch

SHEET TITLE:

ROUTER CONTROL SYSTEM CONTROL WIRING DIAGRAM

SHEET: 1 OF 1 | FILENAME: 5001-00 CW ROUTER CONTROL.dwg | REV LEVEL: 00

PROJECT NO. 106792

DRAWING NO. 5001

PLOT: Oct. 25, 2012 1:33 pm

Copyright © 2012 Diversified Systems

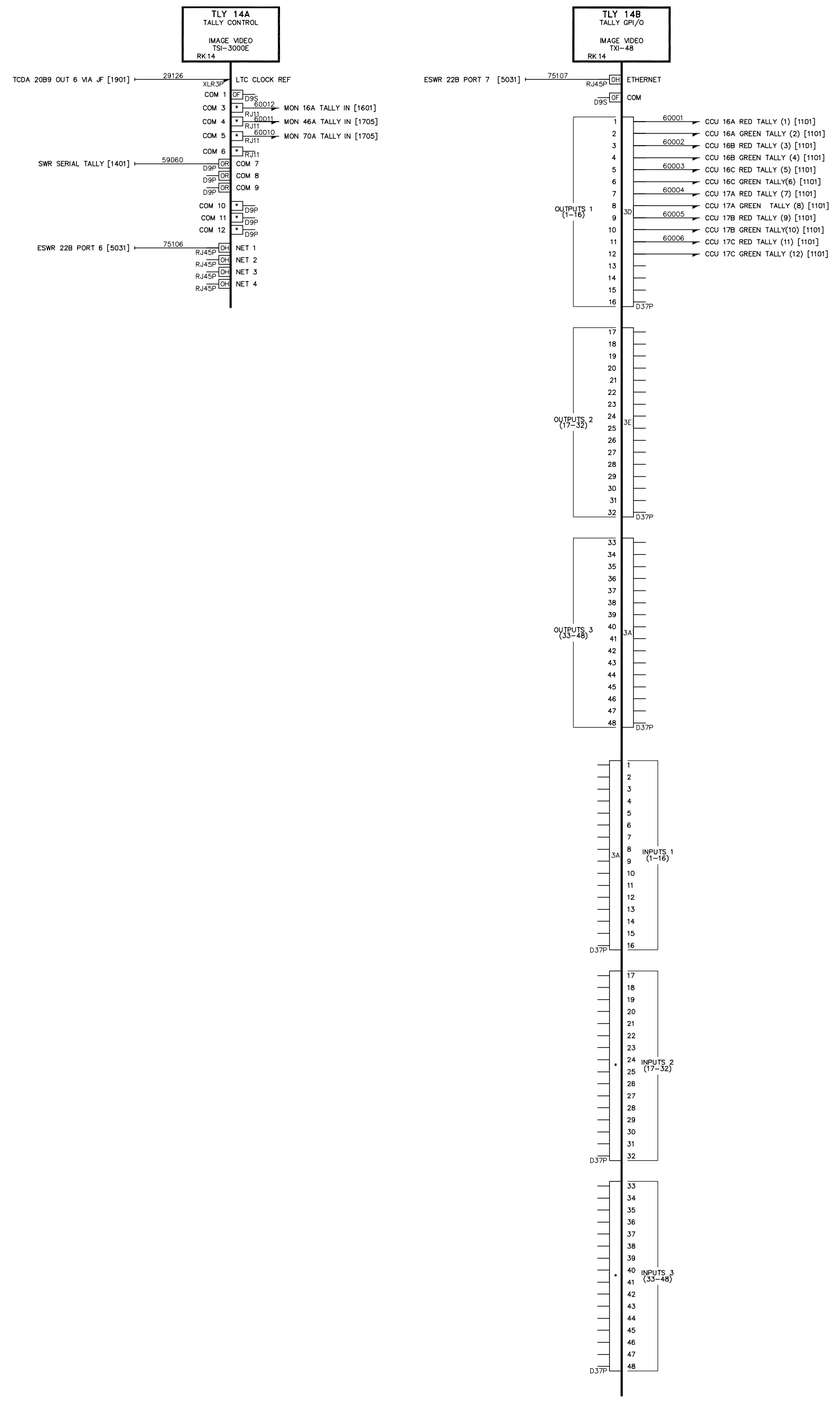

DIVERSIFIED SYSTEMS

REV	DATE	DESCRIPTION	ENG
00	00/00/00	Initial Draft	F. LAST

ENG: S. MCFARLAND
DRAFTER: S. MCFARLAND
SCALE: NTS
UPDATED: 00/00/00 00:00:00
STATUS: **AS-BUILT**

C Arch

SHEET TITLE:

TALLY SYSTEM CONTROL WIRING DIAGRAM

SHEET: 1 OF 1
FILENAME: 5011-00 CW TALLY SYSTEM.dwg
REV LEVEL: 00

PROJECT NO. 106792
DRAWING NO. 5011

PLOT: Oct. 25, 2012 1:32 pm

Copyright © 2012 Diversified Systems

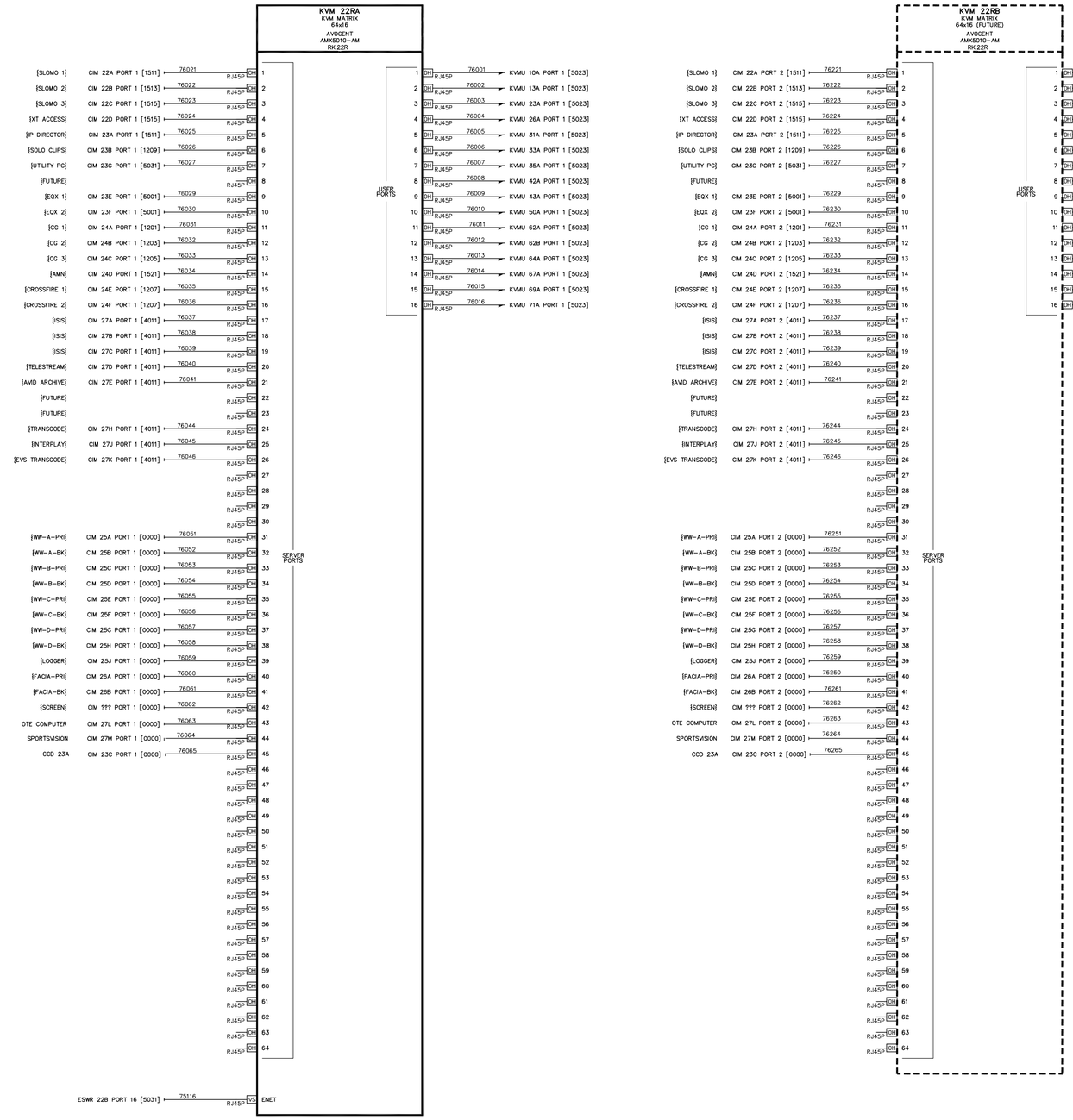

DIVERSIFIED SYSTEMS

REV	DATE	DESCRIPTION	ENG
00	00/00/00	Initial Draft	F. LAST

ENG: S. MCFARLAND
DRAFTER: S. MCFARLAND
SCALE: NTS
UPDATED: 05/16/12 10:14:16
STATUS: **AS-BUILT**

C Arch

SHEET TITLE:

KVM MATRIX CONTROL WIRING DIAGRAM

SHEET: 1 OF 1 | FILENAME: 5021-00 CW KVM MATRIX.dwg | REV LEVEL: 00

PROJECT NO. 106792

DRAWING NO. 5021

PLOT: Oct. 25, 2012 1:33 pm

Copyright © 2012 Diversified Systems

EIC

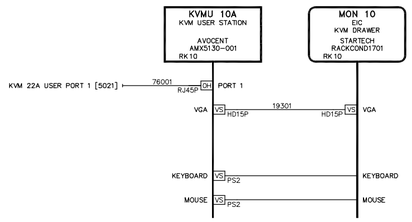

LOGGING

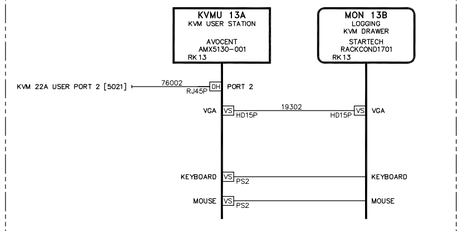

ENGINEER

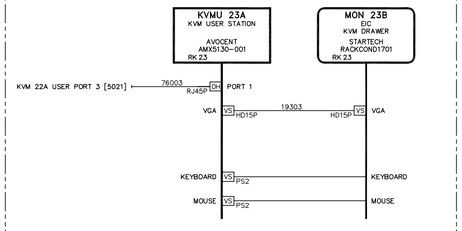

EQUIPMENT ROOM

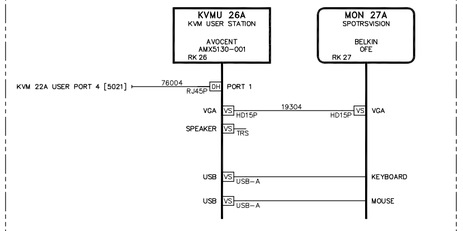

SLOMO 1

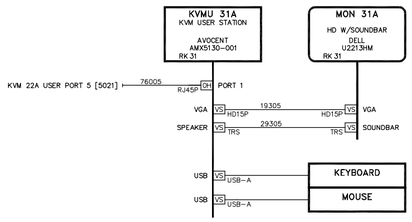

SLOMO 2

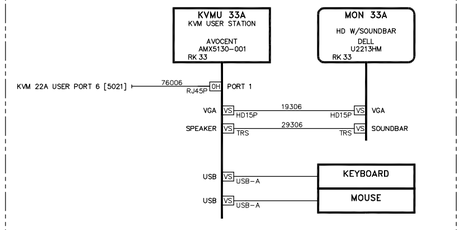

SLOMO 3

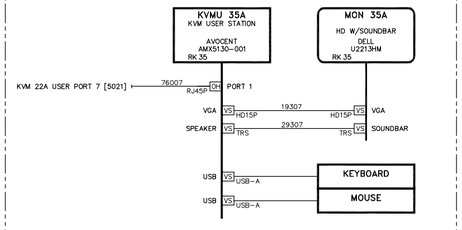

PRODUCER

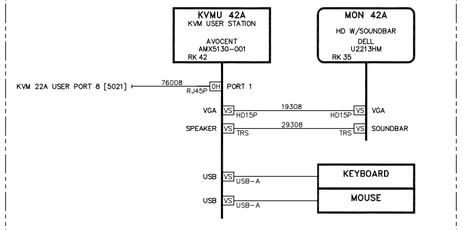

AMN

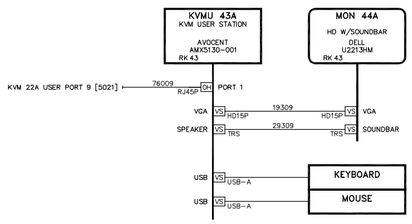

CLIP 1

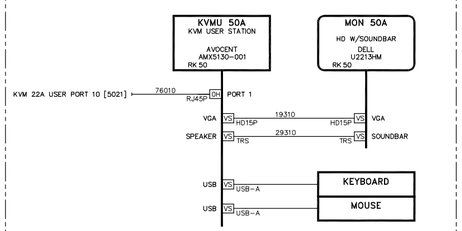

LF MATRIX

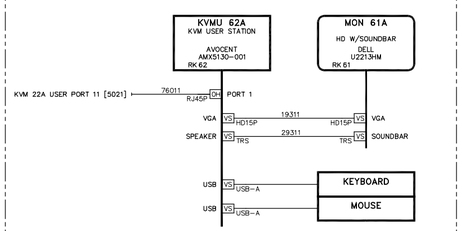

RF MATRIX

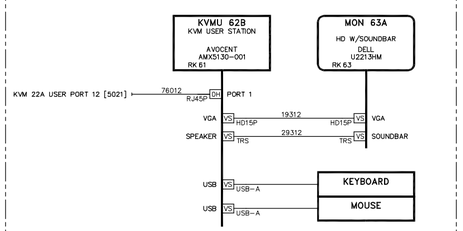

FASCIA

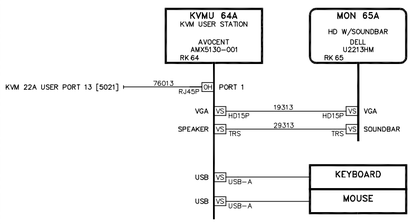

CLIP 2

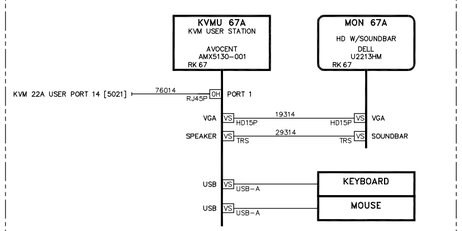

CG 2

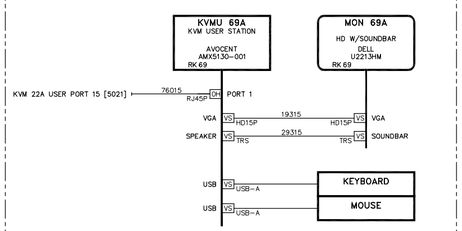

CG 1

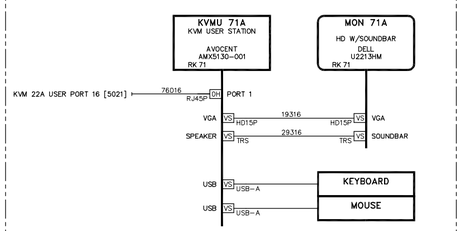

DIVERSIFIED
S Y S T E M S

REV	DATE	DESCRIPTION	ENG
00	00/00/00	Initial Draft	F. LAST

ENG: S. MCFARLAND
DRAFTER: S. MCFARLAND
SCALE: NTS
UPDATED: 01/16/12 11:28:60
STATUS: **AS-BUILT**

C Arch

SHEET TITLE:

KVM USER WORKSTATIONS CONTROL WIRING DIAGRAM

SHEET: 1 OF 1 | FILENAME: 5023-00 CW KVM WORKSTATIONS.dwg | REV LEVEL: 00

PROJECT NO. 106792

DRAWING NO. 5023

PLOT: Oct. 25, 2012 1:34 pm

Copyright © 2012 Diversified Systems

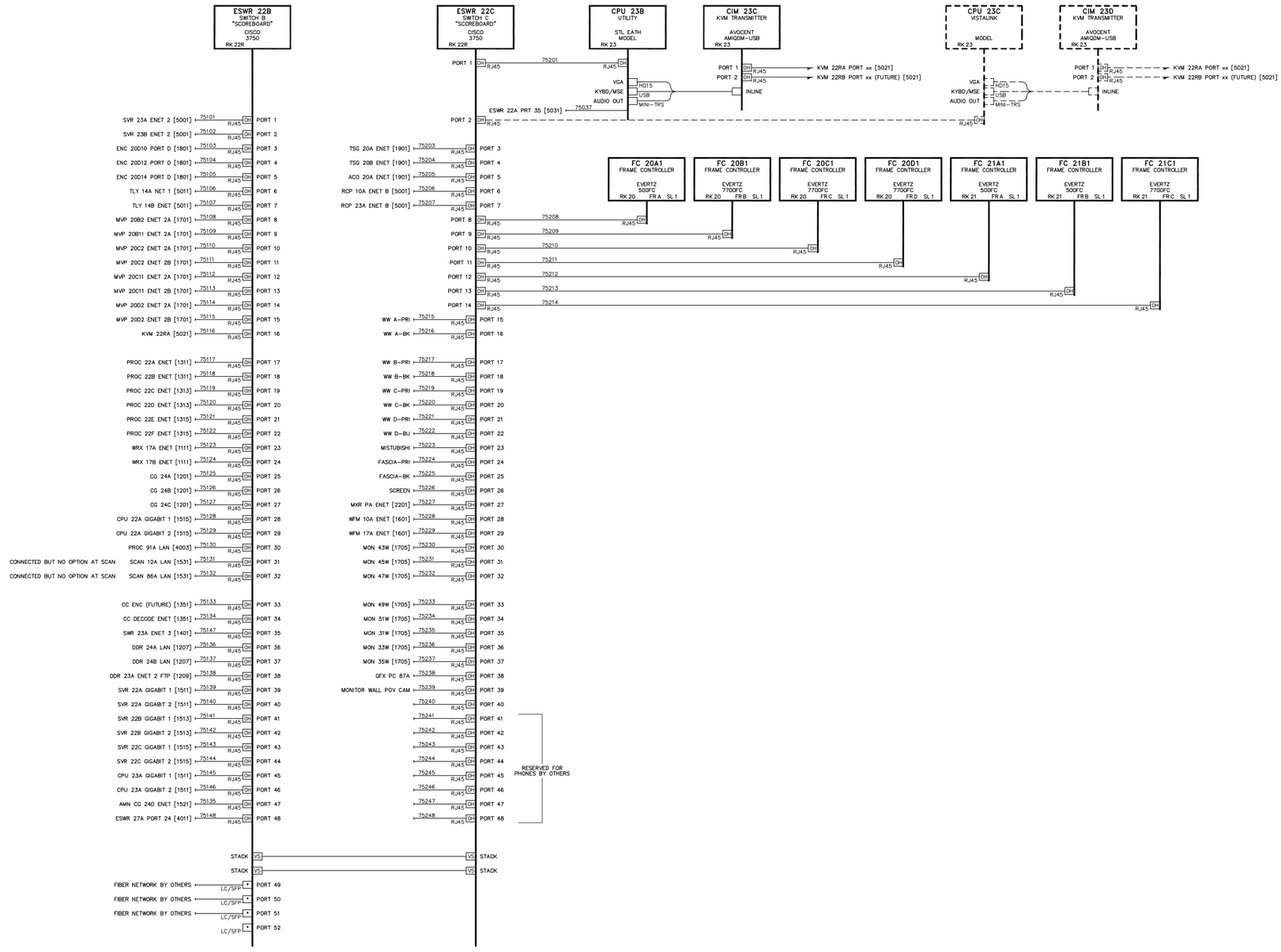

DIVERSIFIED SYSTEMS

REV	DATE	DESCRIPTION	ENG
00	00/00/00	Initial Draft	F. LAST

ENG: S. MCFARLAND
DRAFTER: S. MCFARLAND
SCALE: NTS
UPDATED: 10/02/12 13:51:36
STATUS: **AS-BUILT**

C Arch

SHEET TITLE:

SYSTEM CONTROL NETWORKS CONTROL WIRING DIAGRAM

SHEET: 1 OF 1 | FILENAME: 5031-00 CW CONTROL NETWORK.dwg | REV LEVEL: 00

PROJECT NO. 106792

DRAWING NO. 5031

PLOT: Oct. 25, 2012 1:34 pm

Copyright © 2012 Diversified Systems

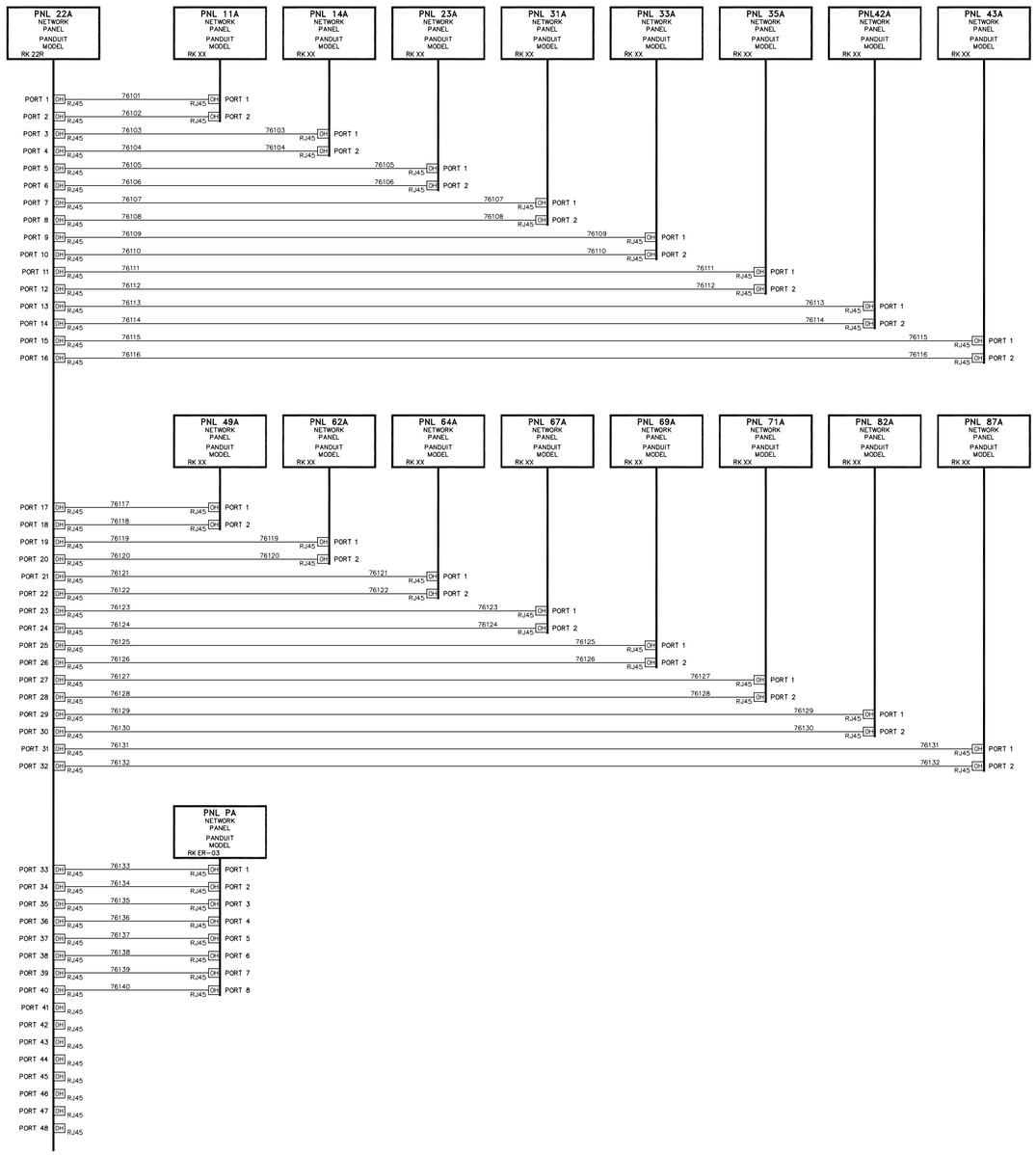

DIVERSIFIED SYSTEMS

REV	DATE	DESCRIPTION	ENG
00	00/00/00	Initial Draft	F. LAST

ENG: M. MEGLATHERY
DRAFTER: M. MEGLATHERY
SCALE: NTS
UPDATED: 10/02/12 13:53:06
STATUS: **AS-BUILT**

C Arch

SHEET TITLE:

NETWORK TIES CONTROL WIRING DIAGRAM

SHEET: 1 OF 1 | FILENAME: 5033-00 CW NETWORK TIES.dwg | REV LEVEL: 00

PROJECT NO. 106792

DRAWING NO. 5033

PLOT: Oct. 25, 2012 1:34 pm

Copyright © 2012 Diversified Systems

QTY 5 HIGH 1ST, HIGH 3RD, LOW 1ST, LOW 3RD, CENTERFIELD

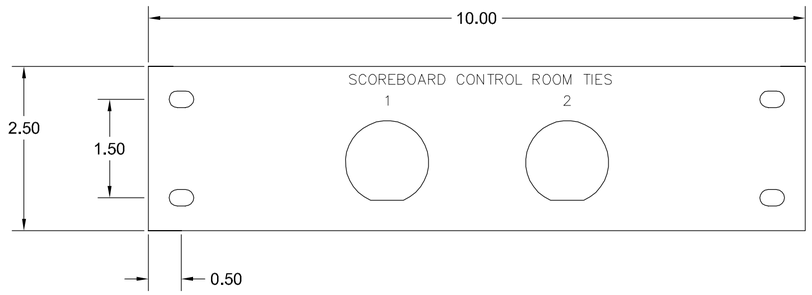

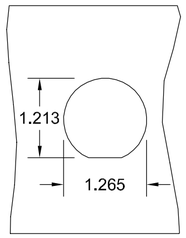

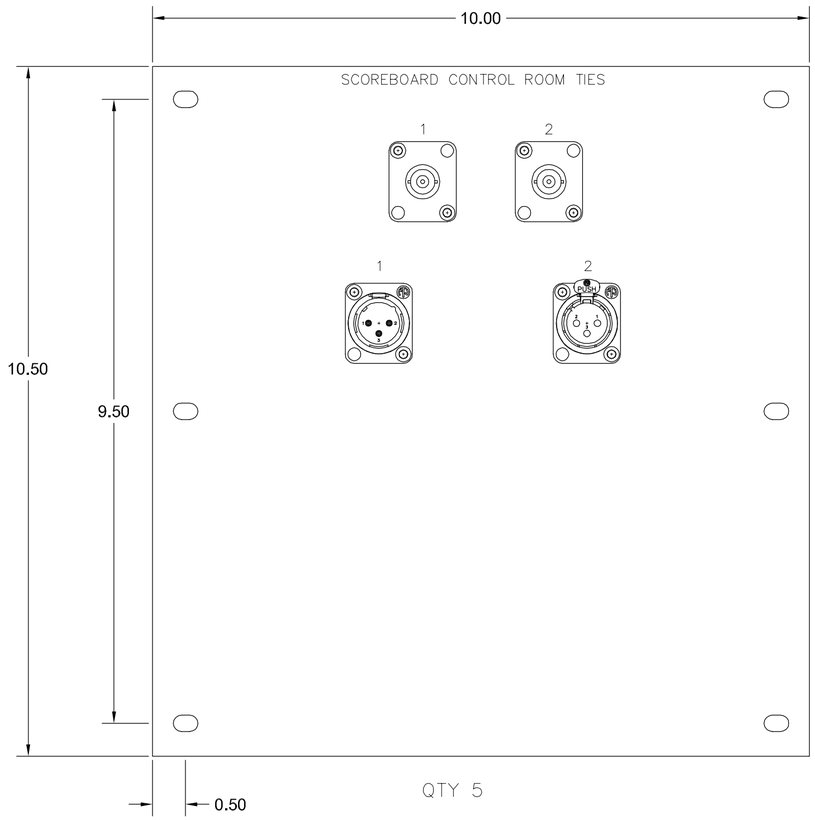

QTY 5

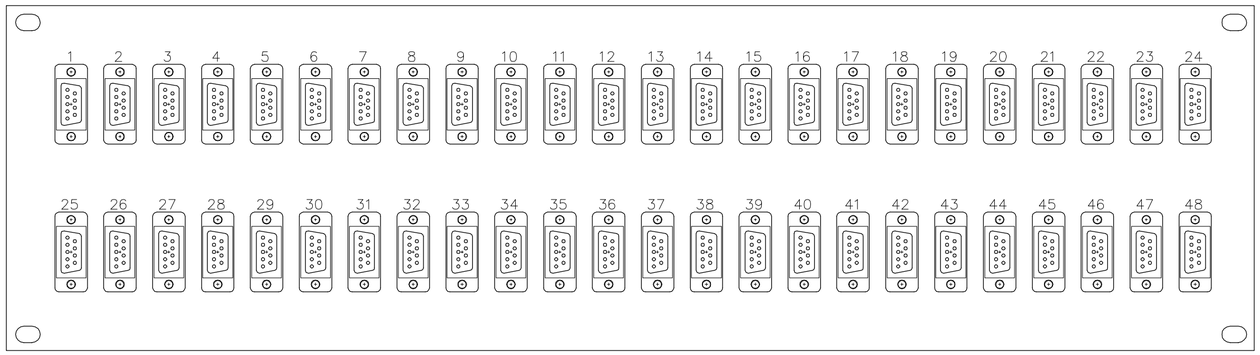

QTY 1 – ALL CONNECTOR D9F–F BULKHEADS

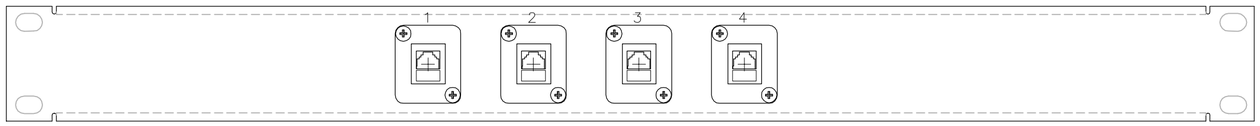

QTY 12 – PLEASE UTILIZE YOUR MOST COST EFFECTIVE CAT5E BULKHEAD OR SOCKET

Copyright © 2012 Diversified Systems

DIVERSIFIED SYSTEMS

REV	DATE	DESCRIPTION	ENG
00	00/00/00	Initial Draft	F. LAST

ENG: M. MEGLATHERY
DRAFTER: M. MEGLATHERY
SCALE: NTS
UPDATED: 02/01/11 04:17:41
STATUS: AS-BUILT

C Arch

SHEET TITLE:
PANEL ELEVATION
STADIUM BOXES

SHEET: 1 OF 1 FILENAME: 6001-00 EL STADIUM CUSTOM PANELS.dwg REV LEVEL: 00

PROJECT NO. 106792
DRAWING NO. 6001

PLOT: Oct. 25, 2012 1:34 pm

RK 21

	1	2	3	4	5	6	7	8	9	10	11	12	13	14	15	16	17	18	19	20	21	22	23	24	25	26	27	28	29	30	31	32
A	CCU 1	CCU 2	CCU 3	CCU 4	CCU 5	(CCU 6)	CCU 7 RF	CCU 8 RF	FS 01 TRUCK	FS 02 TRUCK	FS 03 TRUCK	FS 04 TRUCK	FS 05 TRUCK	FS 06 TRUCK	FS 07 TRUCK	FS 08 TRUCK	FS 09 TRUCK	FS 10 TRUCK	FS 11 TRUCK	FS 12 TRUCK	EVS A1 XT	EVS A2 XT	EVS B1 XT	EVS B2 XT	EVS C1 NANO	DDR A1 XFIRE	DDR A2 XFIRE	DDR B1 XFIRE	DDR B2 XFIRE	DDR C1 SOLO	DDR C2 SOLO	BLURAY AD
B	21A2 DA IN A	21A2 DA IN B	21A3 DA IN A	21A3 DA IN B	21A4 DA IN A	21A4 DA IN B	21A5 DA IN A	21A5 DA IN B	21A9 DA IN A	21A9 DA IN B	21A10 DA IN A	21A10 DA IN B	21A11 DA IN A	21A11 DA IN B	21A12 DA IN A	21A12 DA IN B	21A13 DA IN A	21A13 DA IN B	21A14 DA IN A	21A14 DA IN B	21B2 DA IN A	21B2 DA IN B	21B3 DA IN A	21B3 DA IN B	21B4 DA IN B	21A15 DA IN A	21A15 DA IN B	21A16 DA IN A	21A16 DA IN B	21B7 DA IN A	21B8 DA IN A	21B4 DA IN A
C	CCU 1 DA	CCU 2 DA	CCU 3 DA	CCU 4 DA	CCU 5 DA	(CCU 6) DA	CCU 7 RF DA	CCU 8 RF DA	FS 01 TRUCK DA	FS 02 TRUCK DA	FS 03 TRUCK DA	FS 04 TRUCK DA	FS 05 TRUCK DA	FS 06 TRUCK DA	FS 07 TRUCK DA	FS 08 TRUCK DA	FS 09 TRUCK DA	FS 10 TRUCK DA	FS 11 TRUCK DA	FS 12 TRUCK DA	EVS A1 XT DA	EVS A2 XT DA	EVS B1 XT DA	EVS B2 XT DA	EVS C1 NANO DA	DDR A1 XFIRE DA	DDR A2 XFIRE DA	DDR B1 XFIRE DA	DDR B2 XFIRE DA	DDR C1 SOLO DA	DDR C2 SOLO DA	BLURAY AD DA
D	1	33	65	97	2	34	66	98	3	35	67	99	4	36	68	100	SDI RTR INPUTS 5	37	69	101	6	38	70	102	7	39	71	103	8	40		104
E	VTR 1	VTR 1 SUPER	VTR 2	VTR 2 SUPER	VTR 3	VTR 3 SUPER	VTR 4	VTR 4 SUPER	VTR 5	VTR 5 SUPER	DUB RACK FS	TUNER 1	TUNER 2	TUNER 3	TUNER 4	TUNER 5	CG A1 DA	CG A2 DA	CG B1 DA	CG B2 DA	CG C1 DA	CG C2 DA	DDR C3 SOLO DA	DDR C4 SOLO DA	EDIT 01	EDIT 02	EDIT 03	CCU 5 HD PGM 1	CCU 6 HD PGM 1	PROC 91 SDI	HD BLACK 1	HD BARS 1
F	9	41	73	105	10	42	74	106	11	43	75	107	12	44	76	108	SDI RTR INPUTS 13	45	77	109	14	46	78	110	15	47	79	111	16	48	80	112
G	SWR PGM DA1	SWR PST 2	SWR ME 1 3	SWR ME 1 PV 4	SWR ME 2 5	SWR ME 2 PV 6	SWR ME 3 7	SWR ME 3 PV 8	SWR AUX 1 9	SWR AUX 2 10	SWR AUX 3 11	SWR AUX 4 12	SWR AUX 5 13	SWR AUX 6 14	SWR AUX 7 15	SWR AUX 8 16	SWR PGM SD DA 1&9	SWR PGM SD ARC 4-3	MUX 1	DEMUX 1	CC ENC	CC DEC	WFM EIC		SCALER 1	SCALER 2	MLB AM	MLB NET	SPORT VISION	AMN	CONF 1	CONF 2
H	17	49	81	113	18	50	82	114	19	51	83	115	20	52	84	116	SDI RTR INPUTS 21	53	85	117	22	54	86	118	23	55	87	119	24	56	88	120
J	VIP 1	VIP 2	VIP 3	VIP 4	VIP 5	VIP 6	VIP 7	VIP 8	VIP 9	VIP 10	VIP 11	VIP 12	VIP 13	VIP 14	VIP 15	VIP 16	EVS A1 CHAR	EVS A2 CHAR	EVS A3 CHAR	EVS A4 CHAR	EVS A5 CHAR	EVS A6 CHAR	EVS B1 CHAR	EVS B2 CHAR	EVS B3 CHAR	EVS B4 CHAR	EVS B5 CHAR	EVS B6 CHAR	EVS C1 CHAR	EVS C2 CHAR	EVS C3 CHAR	EVS C4 CHAR
K	25	57	89	121	26	58	90	122	27	59	91	123	28	60	92	124	SDI RTR INPUTS 29	61	93	125	30	62	94	126	31	63	95	127	32	64	96	128
L	1	33	65	97	2	34	66	98	3	35	67	99	4	36	68	100	SDI RTR OUTPUTS 5	37	69	101	6	38	70	102	7	39	71	103	8	40	72	104
M	SCORE BOARD 1	SCORE BOARD 2	SCORE BOARD 3	SCORE BOARD 4	WFM EIC	WFM SHADE		CAM RTN 1	FS 01 HD 1	FS 02 HD 2	FS 03 HD 1	FS 04 HD 2	FS 05 HD 1	FS 06 HD 2	FS 07 HD 1	FS 08 HD 2	FS 09 HD 1	FS 10 HD 2	FS 11 HD 1	FS 12 HD 2	EVS A1 HD 1	EVS A2 HD 2	EVS A3 HD 3	EVS A4 HD 4	EVS A5 HD 5	EVS A6 HD 6	EVS B1 HD 1	EVS B2 HD 2	EVS B3 HD 3	EVS B4 HD 4	EVS B5 HD 5	EVS B6 HD 6
N	9	41	73	105	10	42	74	106	11	43	75	107	12	44	76	108	SDI RTR OUTPUTS 13	45	77	109	14	46	78	110	15	47	79	111	16	48	80	112
P	EVS C1 HD 1	EVS C2 HD 2	EVS C3 HD 3	EVS C4 HD 4	DDR A1 XFIRE	DDR A2 XFIRE	DDR B1 XFIRE	DDR B2 XFIRE	DDR C1 SOLO	DDR C2 SOLO	DDR C3 SOLO	DDR C4 SOLO	VTR 1	VTR 2	VTR 3 DA	VTR 4 DA	VTR 5 DA	BLURAY MUX	DVD-R DA	CG A1	CG A2	CG B1	CG B2	CG C1	CG C2	EDIT 01 DA	EDIT 02 DA	EDIT 03 DA	MATV MUX	MATV MUX	MATV MUX	DUB RD FS
Q	17	49	81	113	18	50	82	114	19	51	83	115	20	52	84	116	SDI RTR OUTPUTS 21	53	85	117	22	54	86	118	23	55	87	119	24	56	88	120
R	SWR INPUT pgm	SWR INPUT 66	SWR INPUT 67	SWR INPUT 68	SWR INPUT 69	SWR INPUT 70	SWR INPUT 71	SWR INPUT 72	TRUCK 1 FIBER	TRUCK 2 FIBER	TRUCK 3 FIBER	TRUCK 4 FIBER							MUX 1	DEMUX 1	CC ENC	CC DEC					MLB AM	MLB NET	SPORT VISION	AMN	CONF 1	CONF 2
S	25	57	89	121	26	58	90	122	27	59	91	123	28	60	92	124	SDI RTR OUTPUTS 29	61	93	125	30	62	94	126	31	63	95	127	32	64	96	128
T	MON 5A EIC	MON 1A EIC	MON 1A LOG	MON 1A LOG	MON 1A TAPE	MON 5A TAPE	MON 9A SHADE	MON 9A SHADE	MON 17A SHADE	MON 17B SHADE	MON 31W EVS	MON 33W EVS	MON 33W EVS	MON 43W WALL	MON 45W WALL	MON 47W WALL	MON 49W WALL	MON 49W WALL	MON 46A TD	MON 46A2 TD	MON 47A TD	MON 47A2 TD	MON 50A CLIP 1	MON 50A2 CLIP 1	MON 48A CLIP 2	MON 48A2 CLIP 2	MON 69A2 CG 2	MON 69A CG 2	MON 68A2 CG 1	MON 70A CG 1	MON 70A2 CG 1	BOOTH MON DA	PA MON	MON 23A
U	CCU 1 DA	CCU 2 DA	CCU 3 DA	CCU 4 DA	CCU 5 DA	(CCU 6) DA	CCU 7 RF DA	CCU 8 RF DA	FS 01 TRUCK DA	FS 02 TRUCK DA	FS 03 TRUCK DA	FS 04 TRUCK DA	FS 05 TRUCK DA	FS 06 TRUCK DA	FS 07 TRUCK DA	FS 08 TRUCK DA	FS 09 TRUCK DA	FS 10 TRUCK DA	FS 11 TRUCK DA	FS 12 TRUCK DA	EVS A1 XT DA	EVS A2 XT DA	EVS B1 XT DA	EVS B2 XT DA	EVS C1 NANO DA	DDR A1 XFIRE DA	DDR A2 XFIRE DA	DDR B1 XFIRE DA	DDR B2 XFIRE DA	DDR C1 SOLO DA	DDR C2 SOLO DA	BLURAY AD DA
V	SWR INPUT 1	SWR INPUT 2	SWR INPUT 3	SWR INPUT 4	SWR INPUT 5	SWR INPUT 6	SWR INPUT 7	SWR INPUT 8	SWR INPUT 9	SWR INPUT 10	SWR INPUT 11	SWR INPUT 12	SWR INPUT 13	SWR INPUT 14	SWR INPUT 15	SWR INPUT 16	SWR INPUT 17	SWR INPUT 18	SWR INPUT 19	SWR INPUT 20	SWR INPUT 21	SWR INPUT 22	SWR INPUT 23	SWR INPUT 24	SWR INPUT 25	SWR INPUT 26	SWR INPUT 27	SWR INPUT 28	SWR INPUT 29	SWR INPUT 30	SWR INPUT 31	SWR INPUT 32
W	VTR 1 SDI 2	VTR 2 SDI 2	VTR 3 SDI 2	VTR 4 ASI 2	VTR 5 SDI 2	CG A1	CG A2	CG B1	CG B2	CG C1	CG C2	CG 1A KEY	CG 1B KEY	CG 2A KEY	CG 2B KEY	CG 3A KEY	CG 3B KEY	DDR A1 KEY	DDR A2 KEY	DDR B1 KEY	DDR B2 KEY	DDR C1 KEY	DDR C2 KEY	DDR C2 SOLO	DDR C4 SOLO	DDR C3 KEY	DDR C4 KEY				HD BLACK 2	HD BARS 2
X	SWR INPUT 33	SWR INPUT 34	SWR INPUT 35	SWR INPUT 36	SWR INPUT 37	SWR INPUT 38	SWR INPUT 39	SWR INPUT 40	SWR INPUT 41	SWR INPUT 42	SWR INPUT 43	SWR INPUT 44	SWR INPUT 45	SWR INPUT 46	SWR INPUT 47	SWR INPUT 48	SWR INPUT 49	SWR INPUT 50	SWR INPUT 51	SWR INPUT 52	SWR INPUT 53	SWR INPUT 54	SWR INPUT 55	SWR INPUT 56	SWR INPUT 57	SWR INPUT 58	SWR INPUT 59	SWR INPUT 60	SWR INPUT 61	SWR INPUT 62	SWR INPUT 63	SWR INPUT 64
Y	SWR OUTPUT 1	PGM MUX	SWR PGM DA-HD2	SWR PGM DA-HD3	SWR PGM DA-SD2	SWR OUTPUT 17	SWR OUTPUT 18	SWR OUTPUT 19	SWR OUTPUT 20	SWR OUTPUT 21	SWR OUTPUT 22	SWR OUTPUT 23	SWR OUTPUT 24	SWR OUTPUT 25	SWR OUTPUT 26	SWR OUTPUT 27	SWR OUTPUT 28	SWR OUTPUT 29	SWR OUTPUT 30	SWR OUTPUT 31	SWR OUTPUT 32	SWR OUTPUT 33	SWR OUTPUT 34	SWR OUTPUT 35	SWR OUTPUT 36	CAM RTN DA	CAM RTN DA	CAM RTN DA	CAM RTN DA	CAM RTN DA	CAM RTN DA	CAM RTN DA
Z	PGM MUX	PRM DCDA	WFM 10A	WFM 17A	SD ARC									CG 1A KEY	CG 1B KEY	CG 2A KEY	CG 2B KEY	CG 3A KEY	CG 3B KEY	CCU 1 RTN 2	CCU 2 RTN2	CCU3 RTN2	CCU4 RTN2	CCU5 RTN2	CCU6 RTN2	CCU 1 RTN 1	CCU 2 RTN 1	CCU 3 RTN 1	CCU 4 RTN 1	CCU 5 RTN 1	CCU 6 RTN 1	OPEN
AA	DDR C3 SOLO	DDR C4 SOLO	CG 1A	CG 1B	CG 2A	CG 2B	CG 3A	CG 3B	DDR C3 SOLO DA	DDR C4 SOLO DA	CG 1A DA	CG 1B DA	CG 2A DA	CG 2B DA	CG 3A DA	CG 3B PAN	SWR PGM DA HD	SWR PGM DA SD				CONF FIBER RX	CONF FIBER RX	future	future	EMBED BLURAY	EMBED MATV 1	EMBED MATV 2	EMBED MATV 3	BOOTH DA 1	BOOTH DA 2	BOOTH DA 3
BB	21B7 DA IN B	21B8 DA IN B	21A6 DA IN A	21A6 DA IN B	21A7 DA IN A	21A7 DA IN B	21A8 DA IN A	21B8 DA IN B	OPEN	OPEN	OPEN	OPEN	OPEN	OPEN	OPEN	OPEN	OPEN	OPEN	FIO 22A SFP 1B	FIO 22A SFP 1A	future	future	CONF FIBER TX	CONF FIBER TX	VFC 5A	ENC MATV 1	ENC MATV 2	ENC MATV 3	BOOTH 1	BOOTH 4	BOOTH 7	BOOTH DJ
CC	CCU 1 DA	CCU 2 DA	CCU 3 DA	CCU 4 DA	CCU 5 DA	(CCU 6) DA	CCU 7 RF DA	CCU 8 RF DA	FS 01 TRUCK DA	FS 02 TRUCK DA	FS 03 TRUCK DA	FS 04 TRUCK DA	FS 05 TRUCK DA	FS 06 TRUCK DA	FS 07 TRUCK DA	FS 08 TRUCK DA	FS 09 TRUCK DA	FS 10 TRUCK DA	FS 11 TRUCK DA	FS 12 TRUCK DA	EVS A1 XT DA	EVS A2 XT DA	EVS B1 XT DA	EVS B2 XT DA	EVS C1 NANO DA	DDR A1 XFIRE DA	DDR A2 XFIRE DA	DDR B1 XFIRE DA	DDR B2 XFIRE DA	DDR C1 SOLO DA	DDR C2 SOLO DA	BLURAY AD DA
DD	OPEN	OPEN	OPEN	OPEN	OPEN	OPEN	OPEN	OPEN	OPEN	OPEN	OPEN	OPEN	OPEN	OPEN	OPEN	OPEN	OPEN	OPEN	OPEN	OPEN	OPEN	OPEN	OPEN	OPEN	OPEN	OPEN	OPEN	OPEN	OPEN	OPEN	OPEN	OPEN
EE	TIE RK11	TIE RK11	TIE RK11	TIE RK11	TIE RK11	TIE RK11	PROC 1 NTSC	PROC 3 NTSC	PROC 5 NTSC	PROC 7 NTSC	PROC 9 NTSC	PROC 11 NTSC	DCDA	BB DA 1	UTIL DA 3 OUT 1	UTIL DA 3 OUT 2	UTIL DA 3 OUT 3	UTIL DA 3 OUT 4	UTIL DA 3 OUT 5	UTIL DA 3 OUT 6	UTIL DA 3 OUT 7	UTIL DA 3 OUT 8	BB DA 6	NTSC BARS	EMR SDI 720p	EMR SDI 720p	EMR SDI 720p	EMR SDI 720p	EMR SDI 720p	SD BLACK 1	SD BARS 1
FF	PROC 1 NTSC	PROC 2 NTSC	PROC 3 NTSC	PROC 4 NTSC	PROC 5 NTSC	PROC 6 NTSC	TIE RK11	TIE RK11	TIE RK11	TIE RK11	TIE RK11	TIE RK11	DVDR DA	UTIL DA 3 IN																		
GG	CCU 1 DA	CCU 2 DA	CCU 3 DA	CCU 4 DA	CCU 5 DA	(CCU 6) DA	CCU 7 RF DA	CCU 8 RF DA	FS 01 TRUCK DA	FS 02 TRUCK DA	FS 03 TRUCK DA	FS 04 TRUCK DA	FS 05 TRUCK DA	FS 06 TRUCK DA	FS 07 TRUCK DA	FS 08 TRUCK DA	FS 09 TRUCK DA	FS 10 TRUCK DA	FS 11 TRUCK DA	FS 12 TRUCK DA	EVS A1 XT DA	EVS A2 XT DA	EVS B1 XT DA	EVS B2 XT DA	EVS C1 NANO DA	DDR A1 XFIRE DA	DDR A2 XFIRE DA	DDR B1 XFIRE DA	DDR B2 XFIRE DA	DDR C1 SOLO DA	DDR C2 SOLO DA	BLURAY AD DA
HH	DDR C3 SOLO DA	DDR C4 SOLO DA	CG 1A DA	CG 1B DA	CG 2A DA	CG 2B DA	CG 3A DA	CG 3B DA	CC ENC MON	CC DEC MON	SWR PGM DA-HD3	SWR PGM DA-SD4	SD ARC MON	STADIUM DISPLAY 1	STADIUM DISPLAY 2	STADIUM DISPLAY 3	STADIUM DISPLAY 4	UTIL DA 1A IN	UTIL DA 1A OUT 1	UTIL DA 1A OUT 2	UTIL DA 1A OUT 3	UTIL DA 1A OUT 4	UTIL DA 1B IN	UTIL DA 1B OUT 1	UTIL DA 1B OUT 2	UTIL DA 1B OUT 3	UTIL DA 1B OUT 4	UTIL DA 2A IN	UTIL DA 2A OUT 1	UTIL DA 2A OUT 2	UTIL DA 2A OUT 3	UTIL DA 2A OUT 4

NOTES:

1. ALL PATCH PANELS ARE ADC FPE4632-MVJ.

Copyright © 2012 Diversified Systems

DIVERSIFIED SYSTEMS

REV	DATE	DESCRIPTION	ENG
00	00/00/00	Initial Draft	F. LAST

ENG: S. MCFARLAND
DRAFTER: J. YOO
SCALE: NTS
UPDATED: 04/10/12 13:04:06
STATUS: **AS-BUILT**

C Arch

SHEET TITLE: HD VIDEO RK 21 A–HH JACKFIELD ELEVATION

PROJECT NO. 106792

DRAWING NO. 7001

SHEET: 1 OF 1 | FILENAME: 7001-01 JF HD Video RK 21 A-HH.dwg | REV LEVEL: 01

PLOT: Oct. 25, 2012 1:34 pm

RK 20

	1	2	3	4	5	6	7	8	9	10	11	12	13	14	15	16	17	18	19	20	21	22	23	24	25	26	27	28	29	30	31	32
A	CCU 16A 1/2	CCU 16B 1/2	CCU 16C 1/2	CCU 17A 1/2	CCU 17B 1/2	CCU 17C 1/2	FS 01 PROC 1 1/2	FS02 PROC 1 3/4	FS 03 PROC 2 1/2	FS 04 PROC 2 3/4	FS 05 PROC 3 1/2	FS 06 PROC 3 3/4	FS 07 PROC 4 1/2	FS 08 PROC 4 3/4	FS09 PROC 5 1/2	FS09 PROC 5 3/4	FS10 PROC 5 5/6	FS10 PROC 5 7/8	FS 11 PROC 6 1/2	FS 11 PROC 6 3/4	FS 11 PROC 6 5/6	FS 11 PROC 6 7/8	FS 12 PROC 6 9/10	FS 12 PROC 6 11/12	FS 12 PROC 6 13/14	FS 12 PROC 6 15/16	DDR C1 SOLO 1/2	DDR C1 SOLO 3/4	DDR C2 SOLO 1/2	DDR C2 SOLO 3/4	DDR C3 SOLO 1/2	DDR C3 SOLO 3/4
B	RTR INPUTS																															
	1	49	97	2	50	98	3	51	99	4	52	100	5	53	101	6	54	102	7	55	103	8	56	104	9	57	105	10	58	106	11	59
C	WIRELESS RX 17A	WIRELESS RX 17B	EVS A1 1/2	EVS A1 3/4	EVS A1 5/6	EVS A1 7/8	EVS A2 9/10	EVS A2 11/12	EVS A2 13/14	EVS A2 15/16	EVS B1 1/2	EVS B1 3/4	EVS B1 5/6	EVS B1 7/8	EVS B2 9/10	EVS B2 11/12	EVS B2 13/14	EVS B2 15/16	EVS C1 1/2	EVS C1 3/4	EVS C1 5/6	EVS C1 7/8	EVS C2 9/10	EVS C2 11/12	EVS C2 13/14	EVS C2 15/16	DDR A1 XFIRE 1/2	DDR A2 XFIRE 1/2	DDR B1 XFIRE 1/2	DDR B2 XFIRE 1/2	DDR C4 SOLO 1/2	DDR C4 SOLO 3/4
	1	2	3	4	5	6	7	8	9	10	11	12	13	14	15	16	17	18	19	20	21	22	23	24	25	26	27	28	29	30	31	32
D	RTR INPUTS																															
	107	12	60	108	13	61	109	14	62	110	15	63	111	16	64	112	17	65	113	18	66	114	19	67	115	20	68	116	21	69	117	22
E	VTR 11A OUT 1/2	VTR 11A OUT 3/4	VTR 12A OUT 1/2	VTR 12A OUT 3/4	VTR 13A OUT 1/2	VTR 13A OUT 3/4	VTR 14A OUT 1/2	VTR 14A OUT 3/4	VTR 15A OUT 1/2	VTR 15A OUT 3/4	BLU RAY A>D 1/2	MATV A>D 3/4	CATV 1 A>D 1/2	CATV 2 A>D 3/4	CATV 3 A>D 1/2	CATV 4 A>D 3/4			CG A1 1/2	CG A2 1/2	CG B1 1/2	CG B2 1/2	CG C1 1/2	CG C2 1/2	EDIT 1 1/2	EDIT 1 3/4	EDIT 2 1/2	EDIT 2 3/4	EDIT 3 1/2	EDIT 3 3/4	DUB RACK 1/2	DUB RACK 3/4
	1	2	3	4	5	6	7	8	9	10	11	12	13	14	15	16	17	18	19	20	21	22	23	24	25	26	27	28	29	30	31	32
F	RTR INPUTS																															
	70	118	23	71	119	24	72	120	25	73	121	26	74	122	27	75	123	28	76	124	29	77	125	30	78	126	31	79	127	32	80	128
G	DEMUX 1/2	DEMUX 3/4	SCALER 12A 1/2	SCALER 71A 1/2	WW RF	WW LF	MITSU FASCIA		MLB AM 1/2	MLB AM 3/4	MLB NET 1/2	MLB NET 3/4								CONF RM 1	CONF RM 2	AMN SERV 1/2	ARC IG 1	ARC IG 2	ARC IG 3	ARC IG 4	ARC IG 5	ARC IG 6	ARC IG 7	ARC IG 8	SILENCE	TONE
	1	2	3	4	5	6	7	8	9	10	11	12	13	14	15	16	17	18	19	20	21	22	23	24	25	26	27	28	29	30	31	32
H	RTR INPUTS																															
	33	81	129	34	82	130	35	83	131	36	84	132	37	85	133	38	86	134	39	87	135	40	88	136	41	89	137	42	90	138	43	91
J																																
	1	2	3	4	5	6	7	8	9	10	11	12	13	14	15	16	17	18	19	20	21	22	23	24	25	26	27	28	29	30	31	32
K	RTR INPUTS																															
	139	44	92	140	45	93	141	46	94	142	47	95	143	48	96	144																
L	RTR OUTPUTS																															
	1	49	97	2	50	98	3	51	99	4	52	100	5	53	101	6	54	102	7	55	103	8	56	104	9	57	105	10	58	106	11	59
M	WFM 10A IN 1/2	WFM 10A IN 3/4	WFM 10A IN 5/6	WFM 10A IN 7/8	WFM 16A IN 1/2	WFM 16A IN 3/4	FS 01 PROC 1 1/2	FS02 PROC 1 3/4	FS 03 PROC 2 1/2	FS 04 PROC 2 3/4	FS 05 PROC 3 1/2	FS 06 PROC 3 3/4	FS 07 PROC 4 1/2	FS 08 PROC 4 3/4	FS09 PROC 5 1/2	FS09 PROC 5 3/4	FS10 PROC 5 5/6	FS10 PROC 5 7/8	FS 11 PROC 6 1/2	FS 11 PROC 6 3/4	FS 11 PROC 6 5/6	FS 11 PROC 6 7/8	FS 12 PROC 6 9/10	FS 12 PROC 6 11/12	FS 12 PROC 6 13/14	FS 12 PROC 6 15/16	DDR C1 SOLO 1/2	DDR C1 SOLO 3/4	DDR C2 SOLO 1/2	DDR C2 SOLO 3/4	DDR C3 SOLO 1/2	DDR C3 SOLO 3/4
	1	2	3	4	5	6	7	8	9	10	11	12	13	14	15	16	17	18	19	20	21	22	23	24	25	26	27	28	29	30	31	32
N	RTR OUTPUTS																															
	107	12	60	108	13	61	109	14	62	110	15	63	111	16	64	112	17	65	113	18	66	114	19	67	115	20	68	116	21	69	117	22
P	PGM MUX 1/2	PGM MUX 3/4	EVS A1 1/2	EVS A1 3/4	EVS A1 5/6	EVS A1 7/8	EVS A2 9/10	EVS A2 11/12	EVS A2 13/14	EVS A2 15/16	EVS B1 1/2	EVS B1 3/4	EVS B1 5/6	EVS B1 7/8	EVS B2 9/10	EVS B2 11/12	EVS B2 13/14	EVS B2 15/16	EVS C1 1/2	EVS C1 3/4	EVS C1 5/6	EVS C1 7/8	EVS C2 9/10	EVS C2 11/12	EVS C2 13/14	EVS C2 15/16	DDR A1 XFIRE 1/2	DDR A2 XFIRE 1/2	DDR B1 XFIRE 1/2	DDR B2 XFIRE 1/2	DDR C4 SOLO 1/2	DDR C4 SOLO 3/4
Q	RTR OUTPUTS																															
	70	118	23	71	119	24	72	120	25	73	121	26	74	122	27	75	123	28	76	124	29	77	125	30	78	126	31	79	127	32	80	128
R	VTR 11A OUT 1/2	VTR 11A OUT 3/4	VTR 12A OUT 1/2	VTR 12A OUT 3/4	VTR 13A OUT 1/2	VTR 13A OUT 3/4	VTR 14A OUT 1/2	VTR 14A OUT 3/4	VTR 15A OUT 1/2	VTR 15A OUT 3/4	BLU RAY MUX 1/2	BLU RAY MUX 3/4	DVD DA D>A 1/2	CAM RET D>A 1/2	MUX 21C11 AES 1	MUX 21C11 AES 2	MUX 21C12 AES 1	MUX 21C12 AES 2	CG A1 1/2	CG A2 1/2	CG B1 1/2	CG B2 1/2	CG C1 1/2	CG C2 1/2	EDIT 1 1/2	EDIT 1 3/4	EDIT 2 1/2	EDIT 2 3/4	EDIT 3 1/2	EDIT 3 3/4	DUB RACK 1/2	DUB RACK 3/4
S	RTR OUTPUTS																															
	33	81	129	34	82	130	35	83	131	36	84	132	37	85	133	38	86	134	39	87	135	40	88	136	41	89	137	42	90	138	43	91
T	MUX 1/2	MUX 3/4	ENC A MATV 1/2	ENC A MATV 3/4	ENC B MATV 1/2	ENC B MATV 3/4	ENC C MATV 1/2	ENC C MATV 3/4	MLB AM 1/2	MLB AM 3/4	MLB NET 1/2	MLB NET 3/4								CONF RM 1	CONF RM 2	AMN SERV 1/2	ARC IG 1	ARC IG 2	ARC IG 3	ARC IG 4	ARC IG 5	ARC IG 6	ARC IG 7	ARC IG 8	AMON 17A 1/2	AMON 17A 3/4
U	RTR OUTPUTS																															
	139	44	92	140	45	93	141	46	94	142	47	95	143	48	96	144																
	1	2	3	4	5	6	7	8	9	10	11	12	13	14	15	16	17	18	19	20	21	22	23	24	25	26	27	28	29	30	31	32
V	MLB AM 5/6	MLB AM 7/8	MLB AM 9/10	MLB AM 11/12	MLB AM 13/14	MLB AM 15/16	MLB AM 17/18	MLB AM 19/20	MLB NET 5/6	MLB NET 7/8	MLB NET 9/10	MLB NET 11/12	MLB NET 13/14	MLB NET 15/16	MLB NET 17/18	MLB NET 19/20																
W																																
	1	2	3	4	5	6	7	8	9	10	11	12	13	14	15	16	17	18	19	20	21	22	23	24	25	26	27	28	29	30	31	32
X																																
Y																																
	1	2	3	4	5	6	7	8	9	10	11	12	13	14	15	16	17	18	19	20	21	22	23	24	25	26	27	28	29	30	31	32
Z																																

NOTES:

1. ALL PATCH PANELS ARE ADC PPE4G32-MVJ.

DIVERSIFIED SYSTEMS

REV	DATE	DESCRIPTION	ENG
00	00/00/00	Initial Draft	F. LAST

ENG: S. MCFARLAND
DRAFTER: J. YOO
SCALE: NTS
UPDATED: 04/10/12 13:02:50
STATUS: **AS-BUILT**

C Arch

SHEET TITLE: AES RK 20 A–Z JACKFIELD ELEVATION

PROJECT NO. 106792

DRAWING NO. 7011

SHEET: 1 OF 1 | FILENAME: 7011-02 JF AES RK 20 A-Z.dwg | REV LEVEL: 02

PLOT: Oct. 25, 2012 1:35 pm

Copyright © 2012 Diversified Systems

TE (ADC) PPE/PPI-15232

RK 10

VJF 10A (row C) / VJF 10A (row D)

Jack	C — VJF 10A	D — VJF 10A
1	HIGH 1st	HIGH 1st
2	HIGH HOME	HIGH HOME
3	HIGH 3rd	HIGH 3rd
4	LOW 1st	LOW 1st
5	LOW HOME	LOW HOME
6	LOW 3rd	LOW 3rd
7	CENTER FIELD	CENTER FIELD
8	SERVICE LEVEL	SERVICE LEVEL
9	POST INTVIEW	POST INTVIEW
10	INVEST DINING	INVEST DINING
11	FUNDA-MENTAL	FUNDA-MENTAL
12	CONF CENTER	CONF CENTER
13	HOME CLUB	HOME CLUB
14	VISITOR CLUB	VISITOR CLUB
15	STADIUM CLUB	STADIUM CLUB
16	MISC 1	MISC 6
17	MISC 2	MISC 7
18	MISC 3	MISC 8
19	MISC 4	MISC 9
20	MISC 5	MISC 10
21	PROC 22A NTSC OUT	
22	PROC 22B NTSC OUT	
23	PROC 22C NTSC OUT	
24	PROC 22D NTSC OUT	
25	PROC 22E NTSC OUT	
26	PROC 22F NTSC OUT	
27		PROC 22A NTSC IN
28		PROC 22B NTSC IN
29		PROC 22C NTSC IN
30		PROC 22D NTSC IN
31		PROC 22E NTSC IN
32		PROC 22F NTSC IN

BITTREE

RK 10

Jack	E — VJF 10B (OFE)	F — VJF 10B (OFE)
1	TRUCK DOCK 1	
2	TRUCK DOCK 2	
3	TRUCK DOCK 3	
4	TRUCK DOCK 4	
5	TRUCK DOCK 5	
6	TRUCK DOCK 6	
7	TRUCK DOCK 7	
8	TRUCK DOCK 8	
9		TRUCK DOCK 9
10		TRUCK DOCK 10
11		TRUCK DOCK 11
12		TRUCK DOCK 12
13		TRUCK DOCK 13
14		TRUCK DOCK 14
15		TRUCK DOCK 15
16		TRUCK DOCK 16
17	VIDEO COACH 1	
18	VIDEO COACH 2	
19	VIDEO COACH 3	
20	VIDEO COACH 4	
21		VIDEO COACH 5
22		VIDEO COACH 6
23		VIDEO COACH 7
24		VIDEO COACH 8
25		
26		NUCOM ANT 4

TE (ADC) PPP-1248

RK 10R

Jack	A — AJF 10	B — AJF 10
1	HIGH 1st 2	HIGH 1st 1
2	HIGH HOME 2	HIGH HOME 1
3	HIGH 3rd 2	HIGH 3rd 1
4	LOW 1st 2	LOW 1st 1
5	LOW HOME 2	LOW HOME 1
6	LOW 3rd 2	LOW 3rd 1
7	CENTER FIELD 2	CENTER FIELD 1
8	SERVICE LEVEL 2	SERVICE LEVEL 1
9	POST INTVIEW 2	POST INTVIEW 1
10	INVEST DINING 2	INVEST DINING 1
11	FUNDA-MENTAL 2	FUNDA-MENTAL 1
12	CONF CENTER 2	CONF CENTER 1
13	CONF CENTER 2	CONF CENTER 1
14	HOME CLUB 2	HOME CLUB 1
15	VISITOR CLUB 2	VISITOR CLUB 1
16	STADIUM CLUB 2	STADIUM CLUB 1
17	TRUCK DOCK 1	
18	TRUCK DOCK 2	
19	TRUCK DOCK 3	
20	TRUCK DOCK 4	
21		TRUCK DOCK 5
22		TRUCK DOCK 6
23	SAP ICOM 9	TRUCK DOCK 7
24	SAP ICOM 10	TRUCK DOCK 8
25	VIDEO COACH 1	
26	VIDEO COACH 2	
27	VIDEO COACH 3	
28	VIDEO COACH 4	
29		VIDEO COACH 5
30		VIDEO COACH 6
31	SAP ICOM 11	VIDEO COACH 7
32	SAP ICOM 12	VIDEO COACH 8
33	PA ROOM ER-02 - APB-09: PT 37	PROC 22E ANALOG AUDIO INPUTS: 1
34	PA ROOM ER-02 - APB-09: PT 38	PROC 22E ANALOG AUDIO INPUTS: 2
35	PA ROOM ER-02 - APB-09: PT 39	PROC 22E ANALOG AUDIO INPUTS: 3
36	PA ROOM ER-02 - APB-09: PT 40	PROC 22E ANALOG AUDIO INPUTS: 4
37	PA ROOM ER-02 - APB-09: PT 41	
38	PA ROOM ER-02 - APB-09: PT 42	
39	PA ROOM ER-02 - APB-09: PT 43	
40	PA ROOM ER-02 - APB-09: PT 44	
41	PROC 22E ANALOG AUDIO OUTPUTS: 1	PA ROOM ER-02 - APB-09: PT 45
42	PROC 22E ANALOG AUDIO OUTPUTS: 2	PA ROOM ER-02 - APB-09: PT 46
43	PROC 22E ANALOG AUDIO OUTPUTS: 3	PA ROOM ER-02 - APB-09: PT 47
44	PROC 22E ANALOG AUDIO OUTPUTS: 4	PA ROOM ER-02 - APB-09: PT 48
45	PROC 22E ANALOG AUDIO OUTPUTS: 5	PA ROOM ER-02 - APB-09: PT 49
46	PROC 22E ANALOG AUDIO OUTPUTS: 6	PA ROOM ER-02 - APB-09: PT 50
47	PROC 22E ANALOG AUDIO OUTPUTS: 7	PA ROOM ER-02 - APB-09: PT 51
48	PROC 22E ANALOG AUDIO OUTPUTS: 8	PA ROOM ER-02 - APB-09: PT 52

NOTES:

1. INDICATES NORMALING.

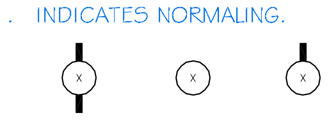

Copyright © 2012 Diversified Systems

DIVERSIFIED SYSTEMS

REV	DATE	DESCRIPTION	ENG
00	00/00/00	Initial Draft	F. LAST

ENG: S. MCFARLAND
DRAFTER: J. YOO
SCALE: NTS
UPDATED: 04/11/12 10:13:52
STATUS: **AS-BUILT**

C Arch

SHEET TITLE: VIDEO AND AUDIO TIE LINES JACKFIELD ELEVATION

SHEET: 1 OF 1 | FILENAME: 7021-00 JF RK 10 VJF C-F AJF A-B.dwg | REV LEVEL: 00

PROJECT NO. 106792
DRAWING NO. 7021

PLOT: Oct. 25, 2012 1:35 pm

RK 11

TXPP 11A	A	CCU 1	CCU 2	CCU 3	CCU 4	CCU 5	CCU 6		
TXPP 11B	B	HIGH 1st	HIGH 1st	BOOTH 1	HIGH 3rd	HIGH 3rd	LOW 1st	LOW 1st	
TXPP 11C	C	LOW HOME	LOW HOME	LOW 3rd	LOW 3rd	CENTER FIELD	CENTER FIELD	BOOTH 7	
TXPP 11D	D	SERVICE LEVEL	SERVICE LEVEL	POST INTVIEW	POST INTVIEW	IN-VESTOR	IN-VESTOR	FUNDA-MENTAL	FUNDA-MENTAL
TXPP 11E	E	CONF CENTER	CONF CENTER	HOME CLUB	HOME CLUB	VISITOR CLUB	VISITOR CLUB	STADIUM CLUB	STADIUM CLUB

Copyright © 2012 Diversified Systems

DIVERSIFIED SYSTEMS

REV	DATE	DESCRIPTION	ENG
00	00/00/00	Initial Draft	F. LAST

ENG: S. MCFARLAND
DRAFTER: J. YOO
SCALE: NTS
UPDATED: 04/10/12 13:51:31
STATUS: AS-BUILT

C Arch

SHEET TITLE: TRIAX TXPP 11A–11E JACKFIELD ELEVATION

SHEET: 1 OF 1 FILENAME: 7031-00 JF RK 10R VJF A-B.dwg REV LEVEL: 0

PROJECT NO. 106792
DRAWING NO. 7031

PLOT: Oct. 25, 2012 1:35 pm